Metal Earth®

3D METAL MODEL KITS

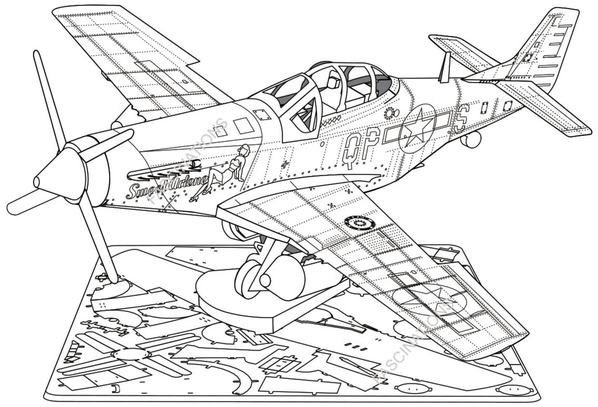

P-51D MUSTANG™
Sweet Arlene

OPTIONAL: Instructions to assemble this model with a raised landing gear configuration can be found here: www.metalearth.com/flyingp51

It is highly recommended that you visit www.metalearth.com/360/MMS180 to see the completed model before assembling your own.

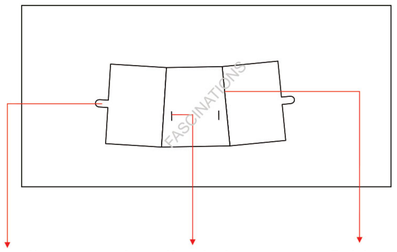

Legends:

- E — Engraved/Color side
- NE — Non-engraved/Silver side
- Attention point
- Insert tab and bend 90 degrees
- Insert tab and twist 90 degrees

Assembly tip:

If needed, slightly twist tabs to hold parts together then untwist and bend them down for a nice finish

Recommended tools:

-Wire cutters: helpful for taking parts from the metal sheets.

-Tweezers or needle nose pliers: helpful for folding parts, bending and twisting tabs.

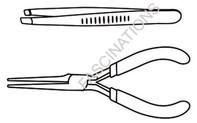

Metal sheets

A — Parts that are in the same color are duplicates

B

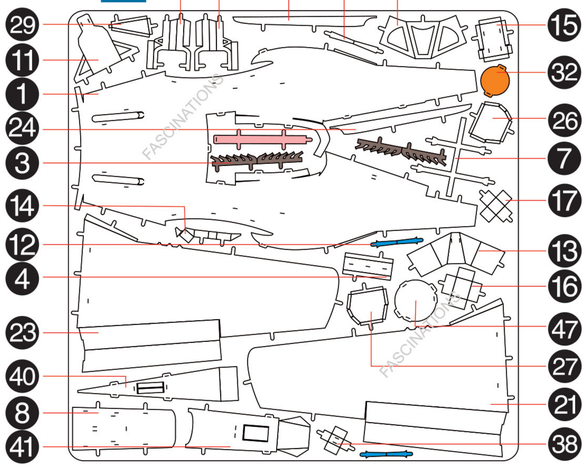

In order to avoid possible injury from sharp edges, please carefully discard the metal sheets after parts have been removed

Assembly Flow Chart

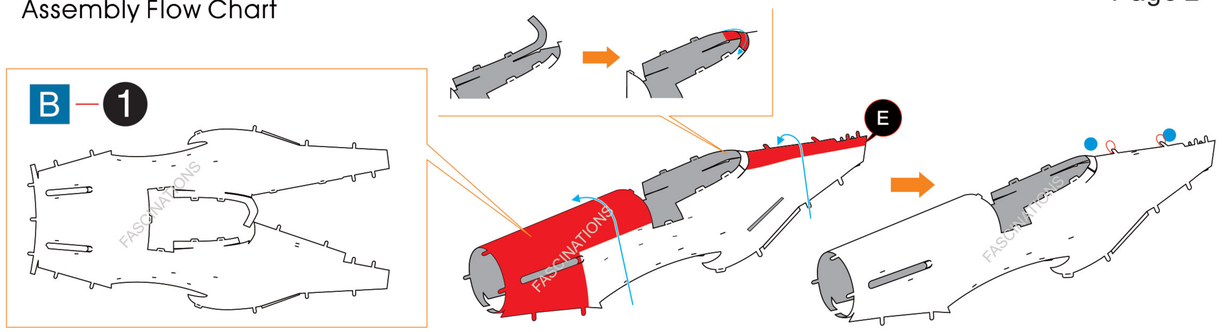

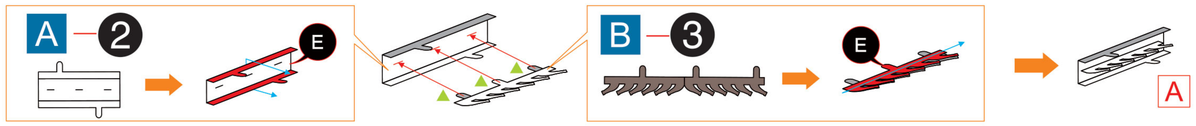

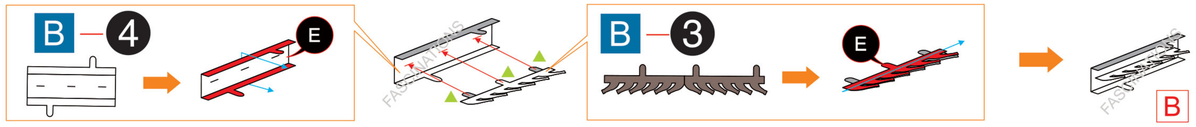

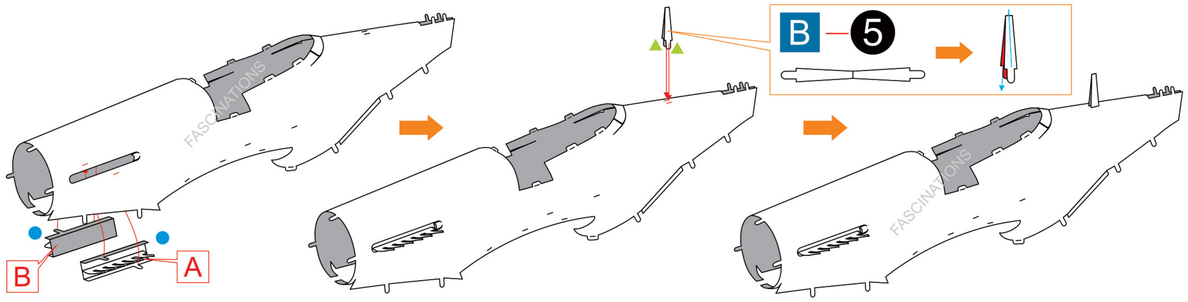

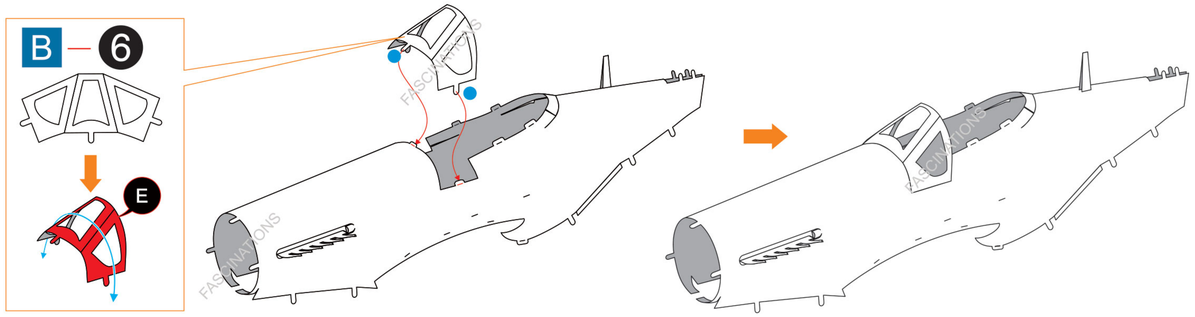

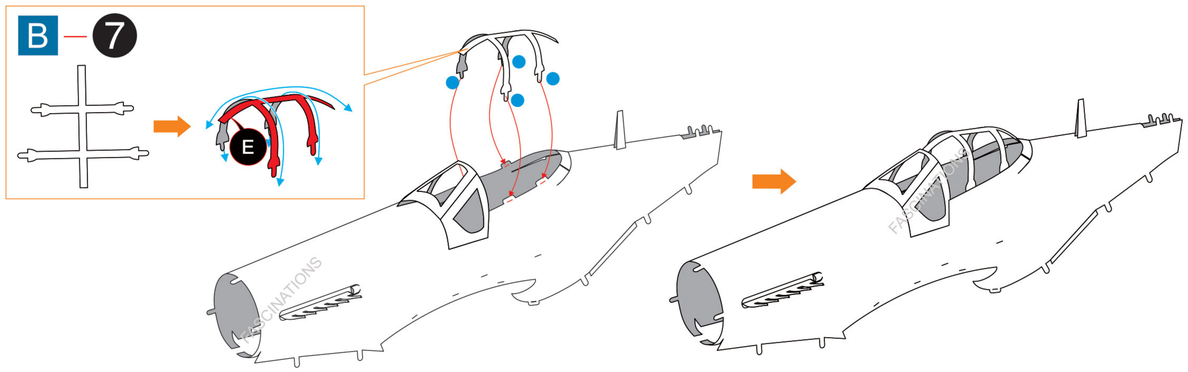

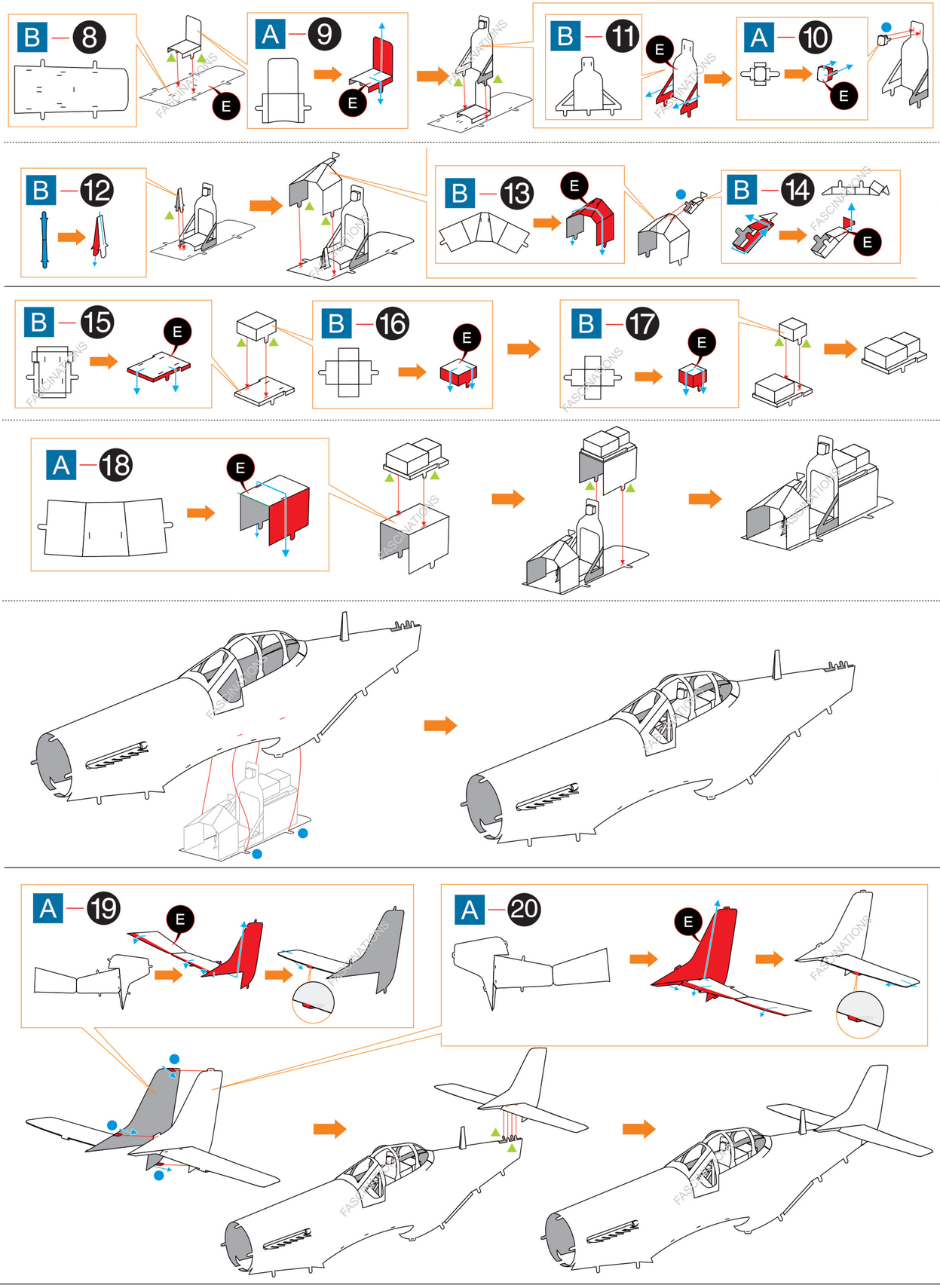
B 8
A 9
B 11
A 10
B 12
B 13
B 14
B 15
B 16
B 17
A 18
A 19
A 20
E

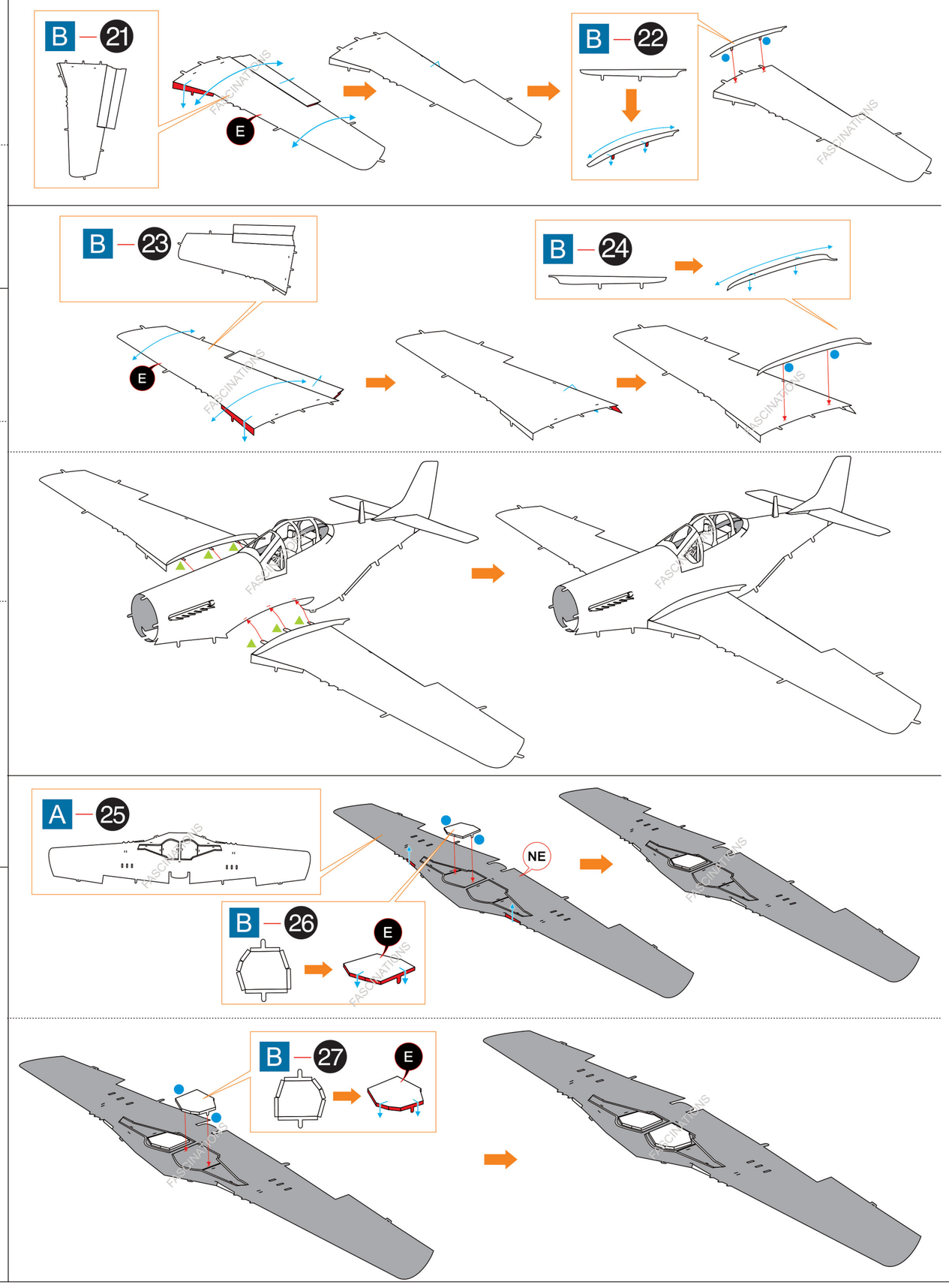
B 21
B 22
B 23
B 24
A 25
B 26
B 27
E
NE

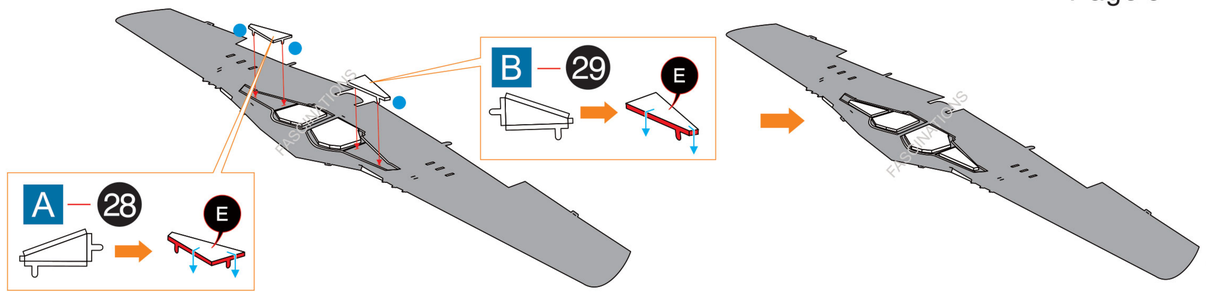
A — 28
E
B — 29
E

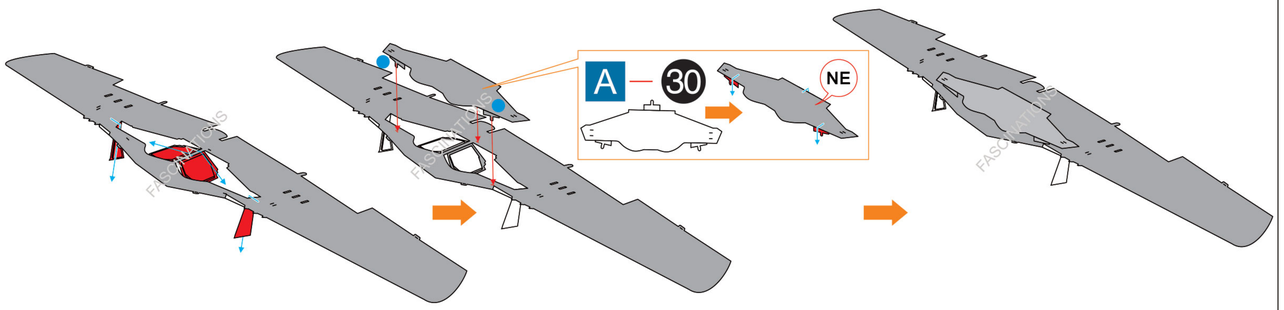
A — 30
NE

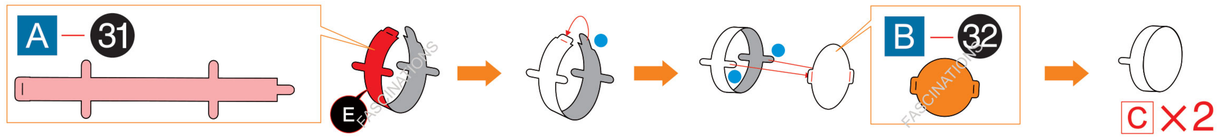
A — 31
E
B — 32
C ×2

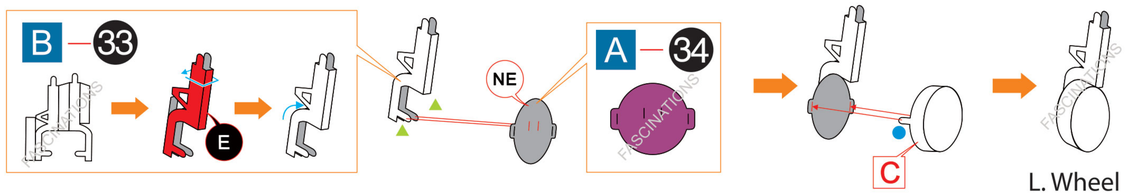
B — 33
E
NE
A — 34
C
L. Wheel

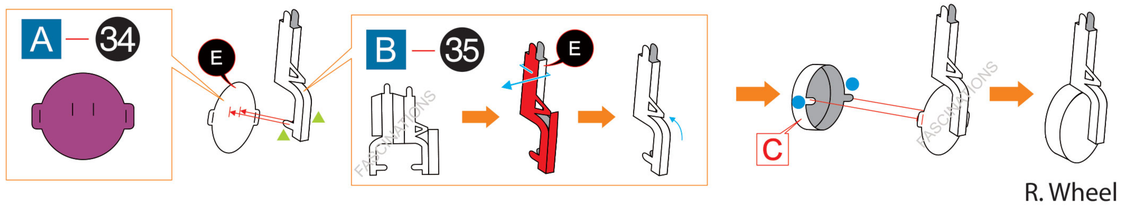
A — 34
E
B — 35
E
C
R. Wheel

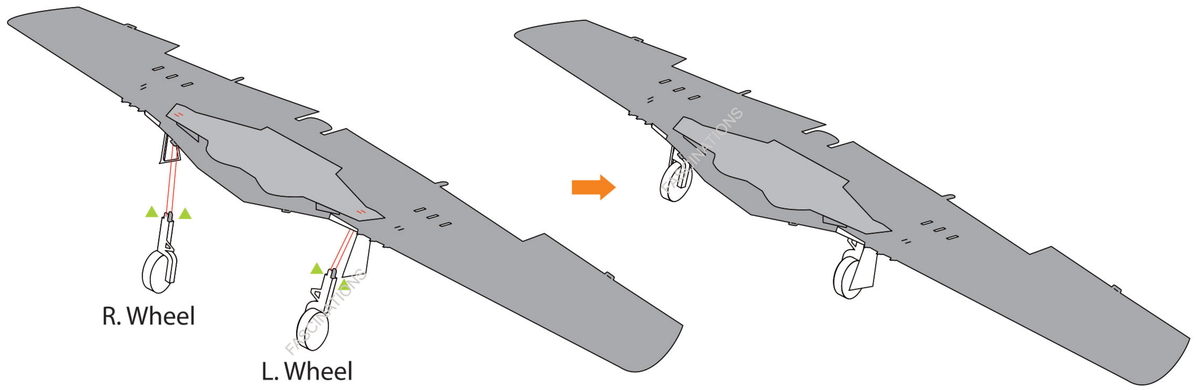
R. Wheel
L. Wheel

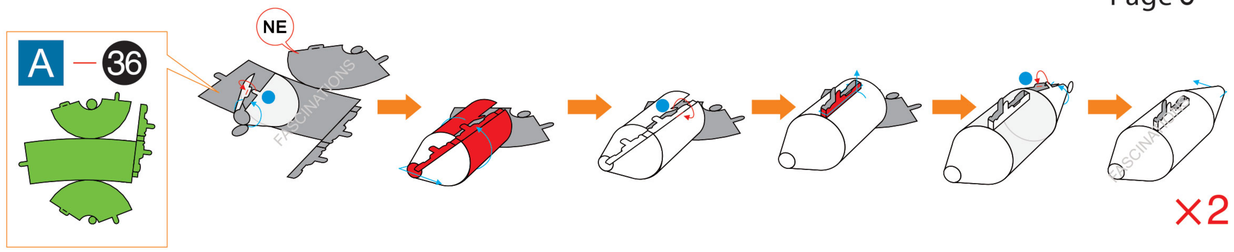
A — 36
NE
×2

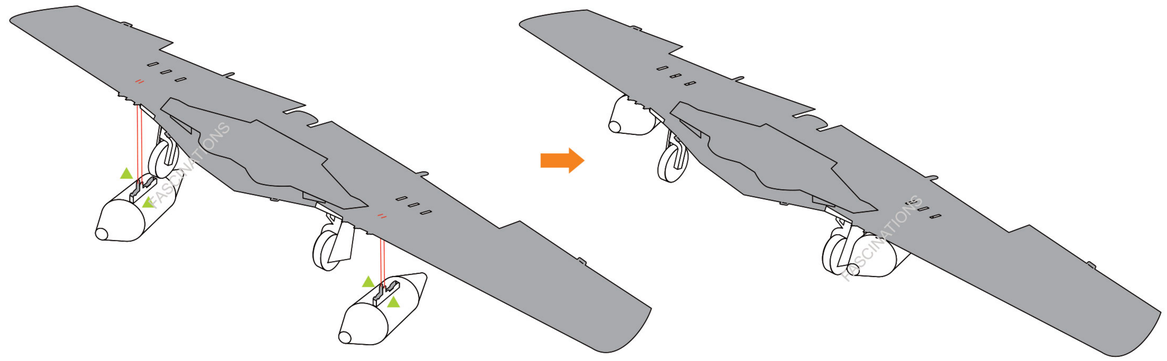

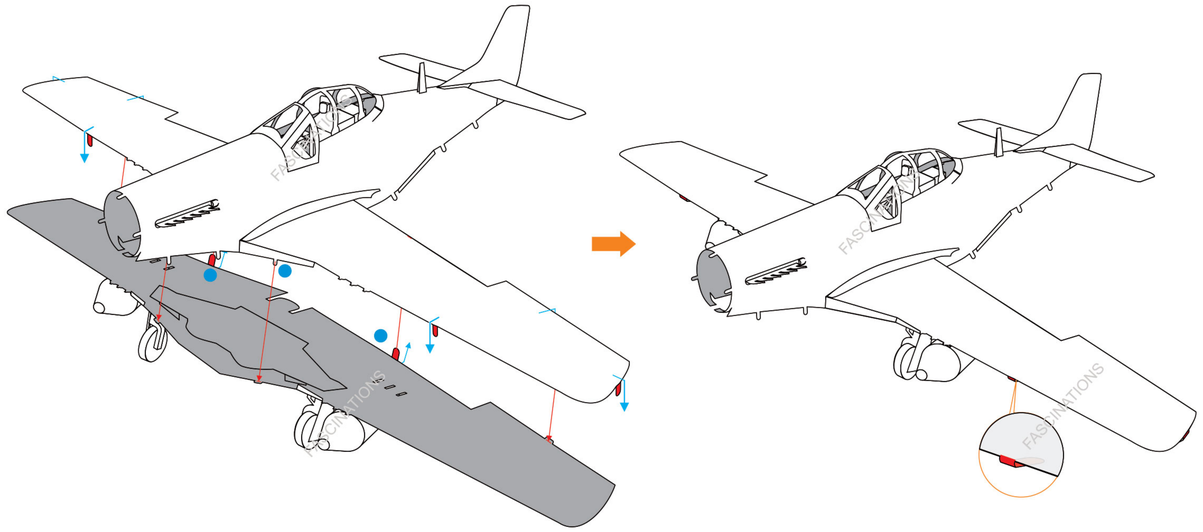

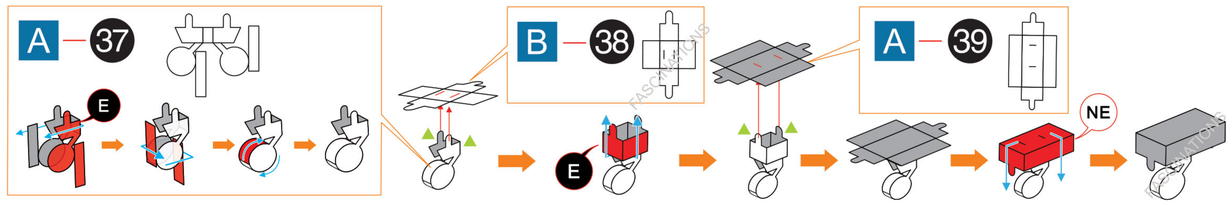
A — 37
E
B — 38
E
A — 39
NE

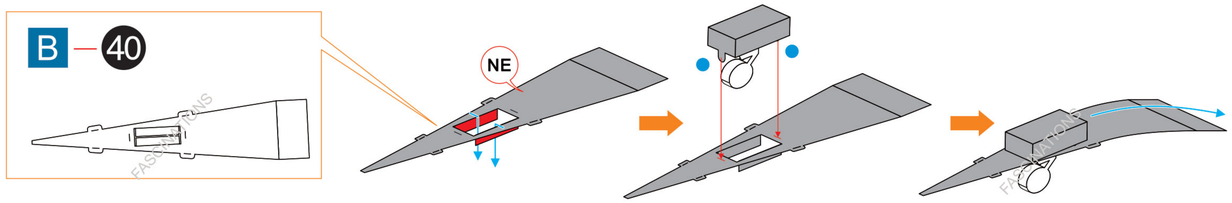
B — 40
NE

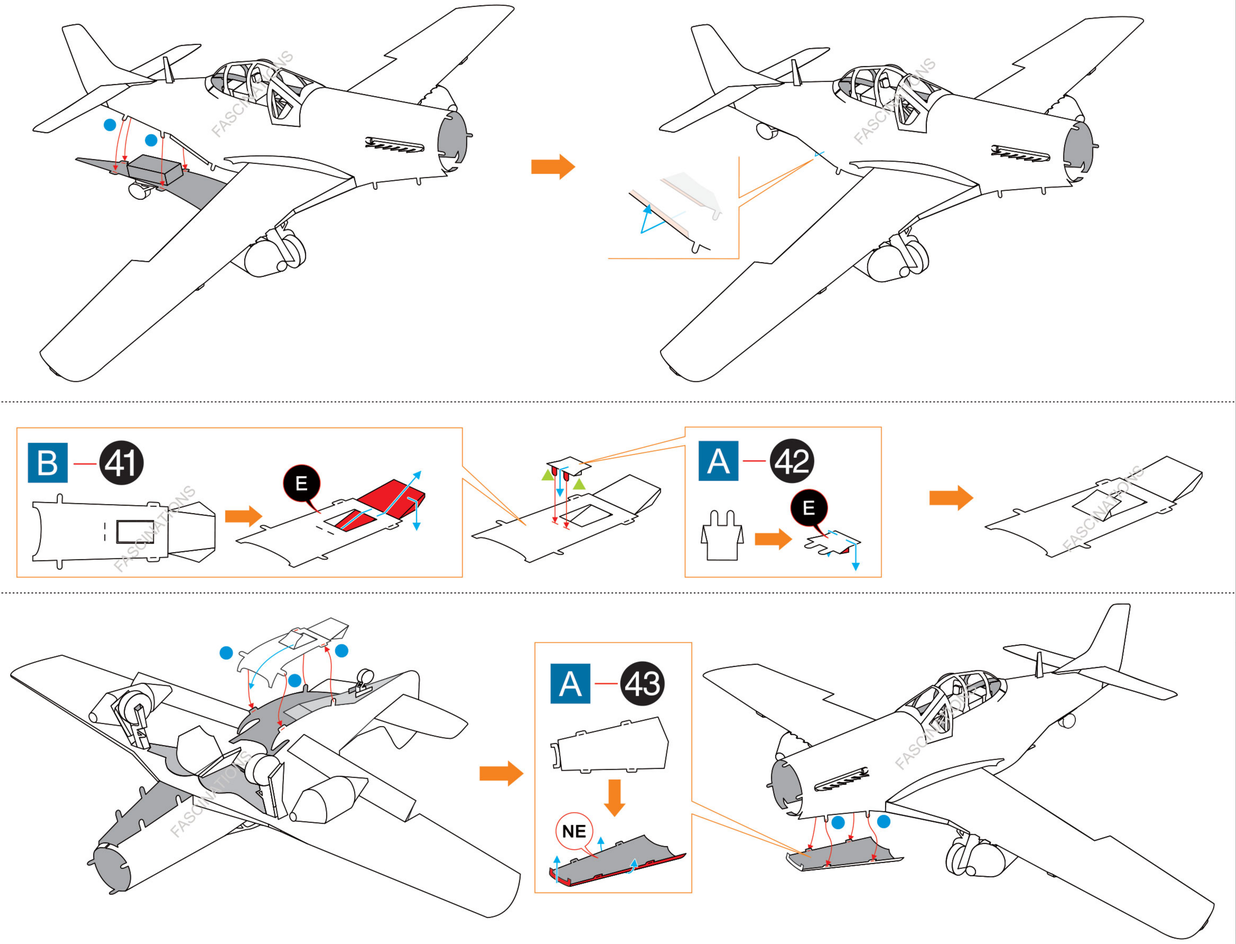

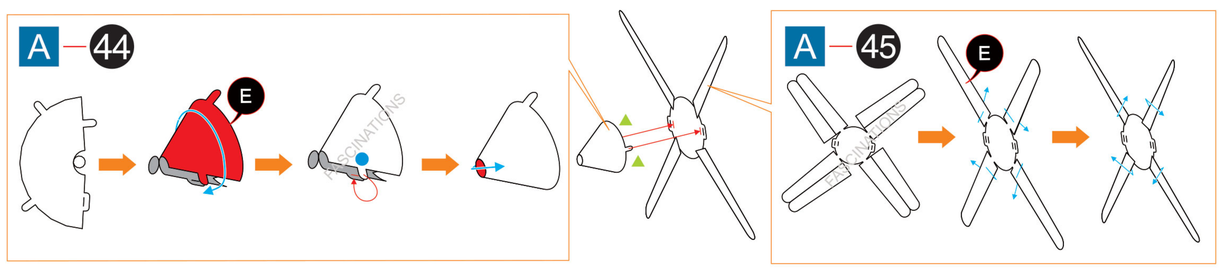

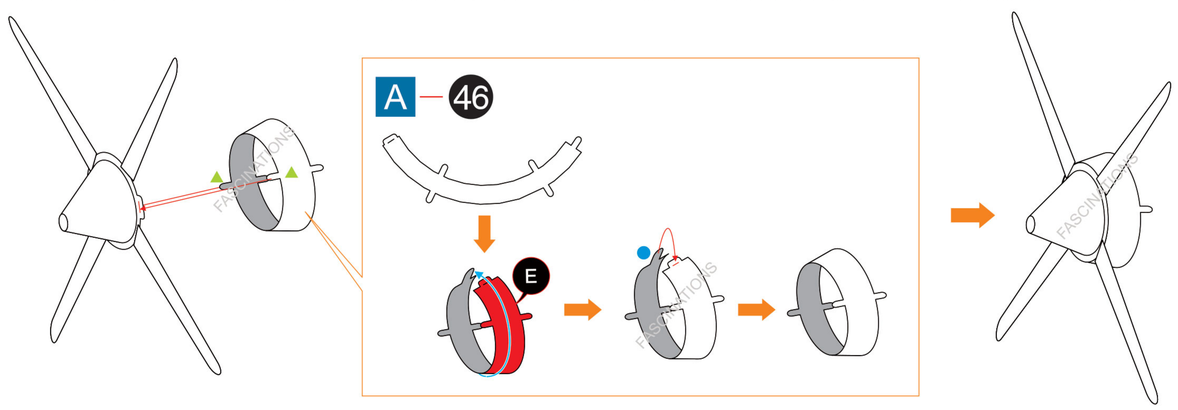

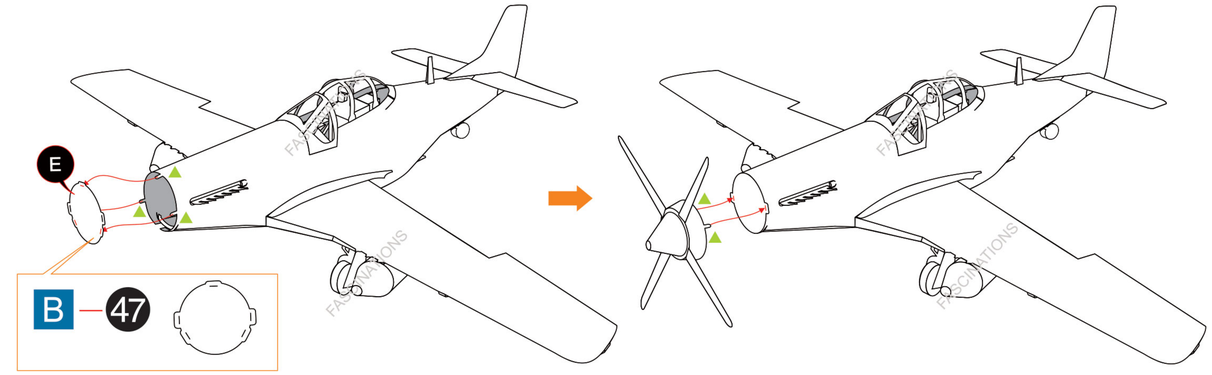

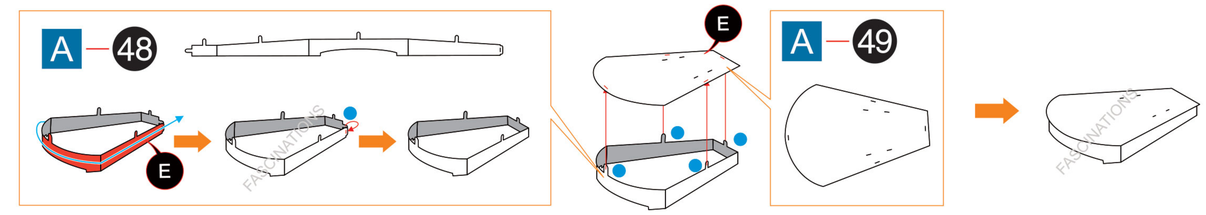

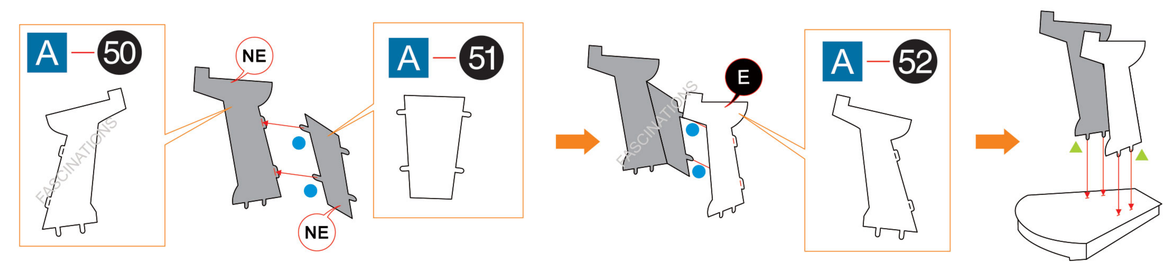

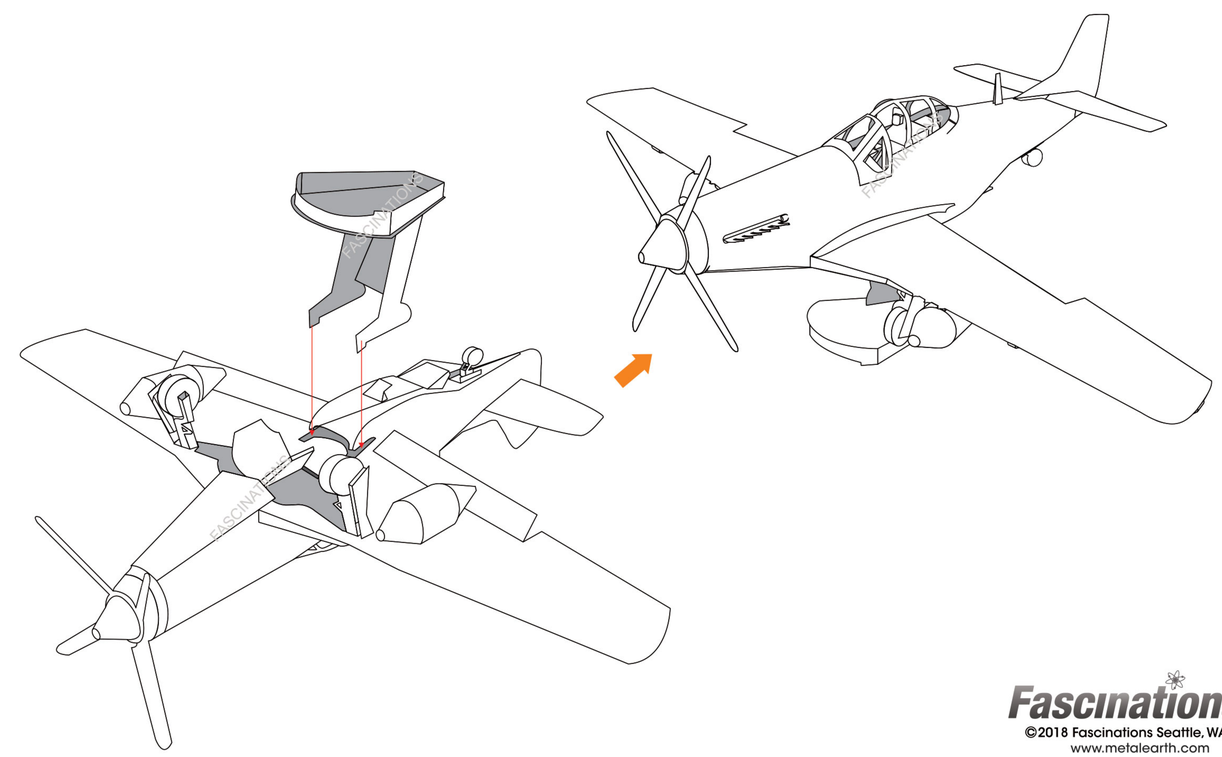

Fascinations
©2018 Fascinations Seattle, WA
www.metalearth.com