Metal Earth®

3D METAL MODEL KITS

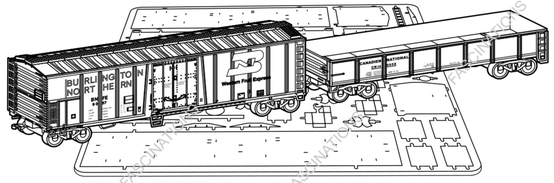

Box Car And Hopper Car

Item No. MMG104

360° view

It is highly recommended that you visit
www.metalearth.com/360/mmg104
to see the completed model before assembling your own

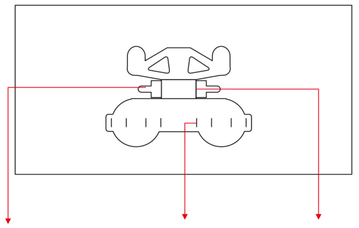

Insertion tabs are inserted and then folded

Insertion holes

Fold lines can be seen as shown here

Legends:

- E — Engraved side
- NE — Non-engraved side
- Attention point
- Insert tab and bend 90 degrees
- Insert tab and twist 90 degrees

Assembly tip:

If needed, slightly twist tabs to hold parts together then untwist and bend them down for a nice finish

Recommended tools:

-Wire cutters: helpful for taking parts from the metal sheets.

-Tweezers or needle nose pliers: helpful for folding parts, bending and twisting tabs.

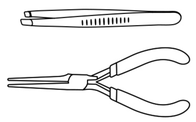

Metal sheets

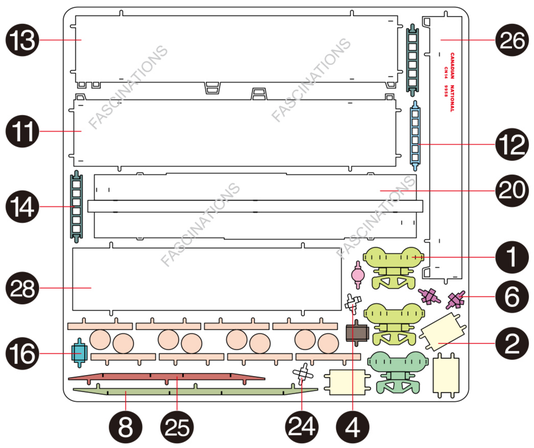

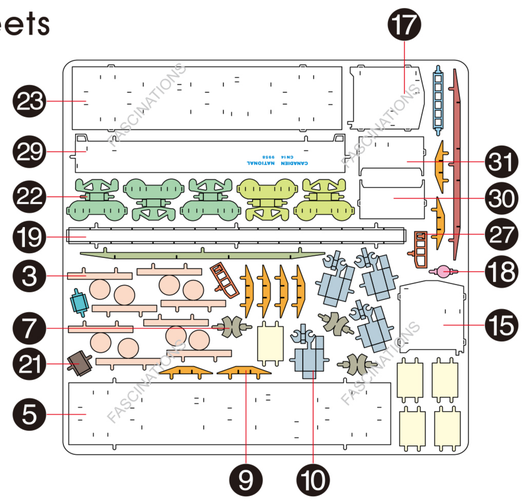

In order to avoid possible injury from sharp edges, please carefully discard the metal sheet after parts have been removed

Assembly Flow Chart

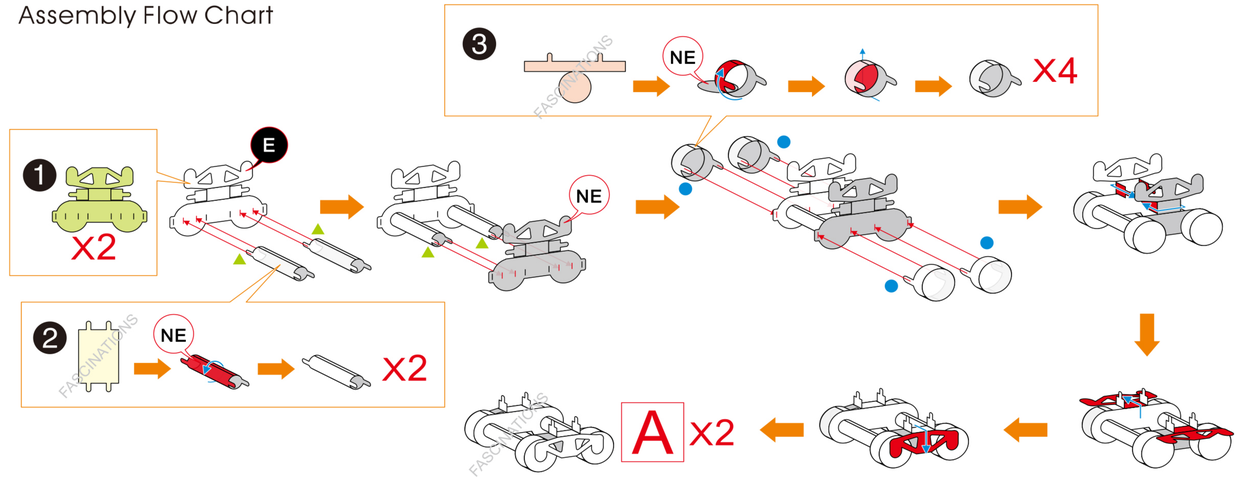

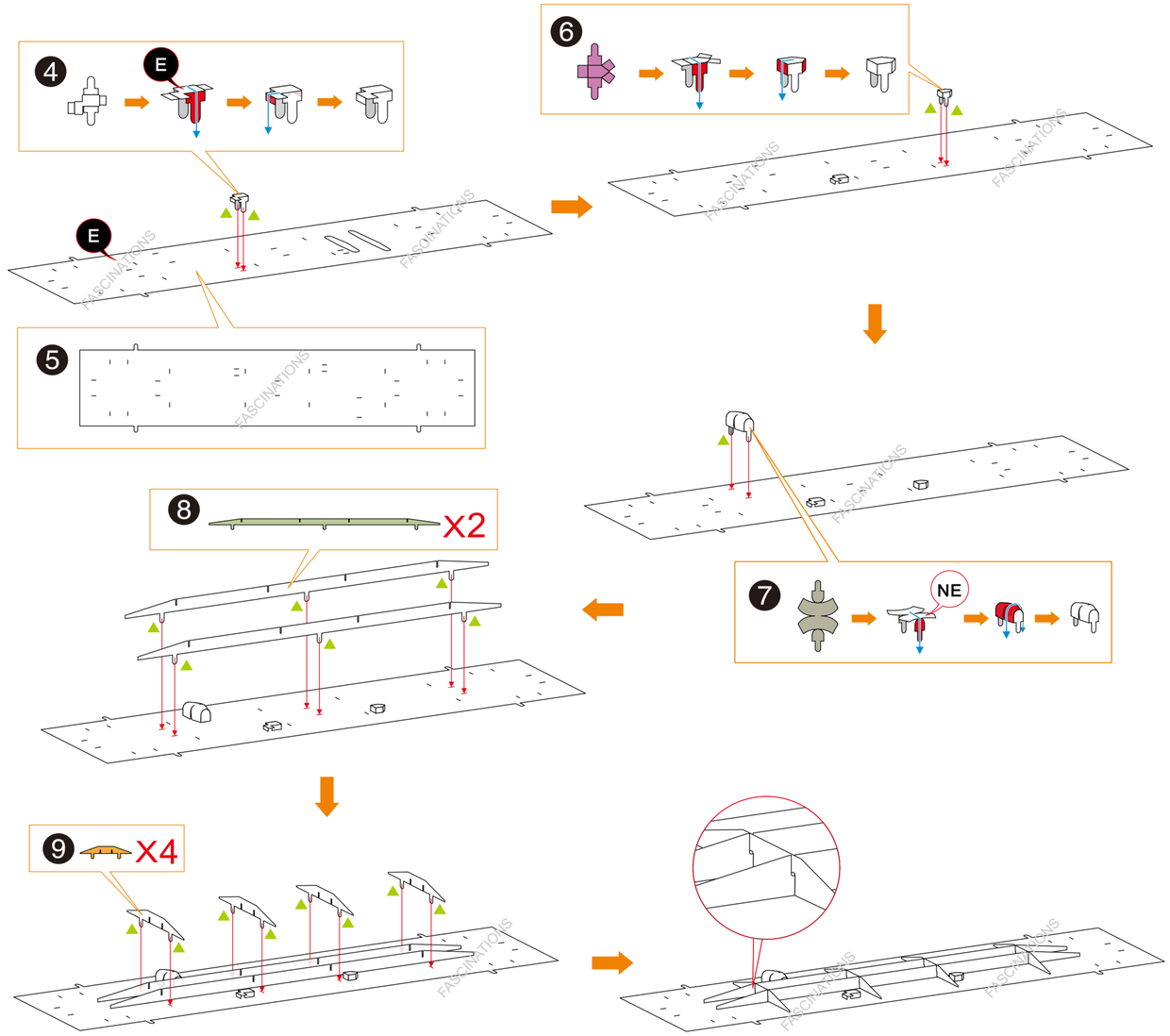

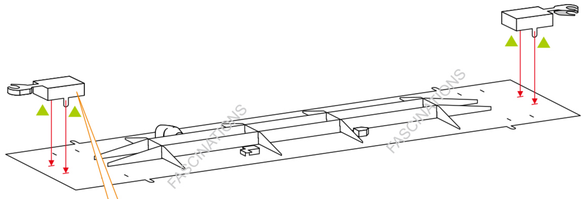

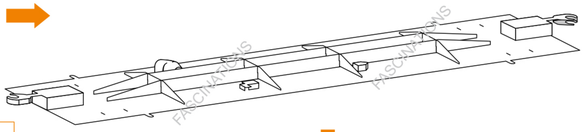

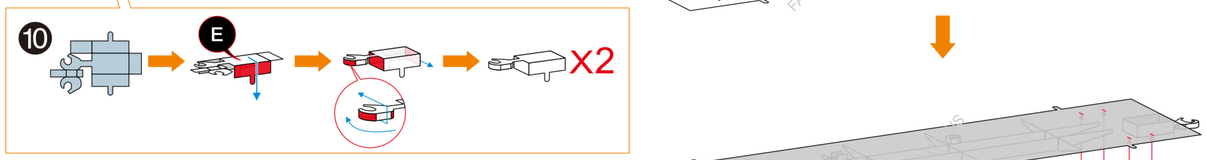

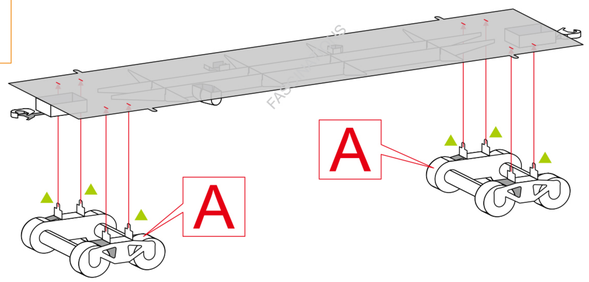

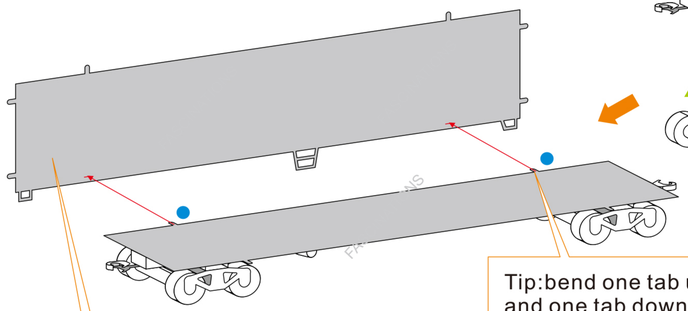

Tip:bend one tab up
and one tab down

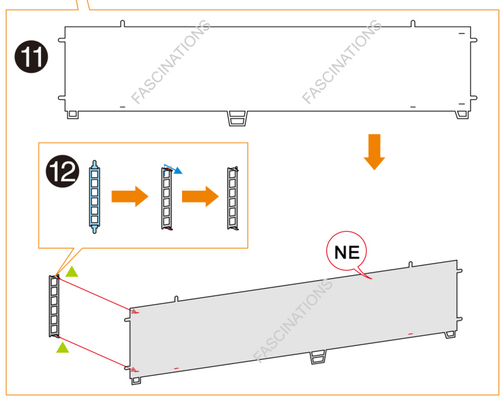

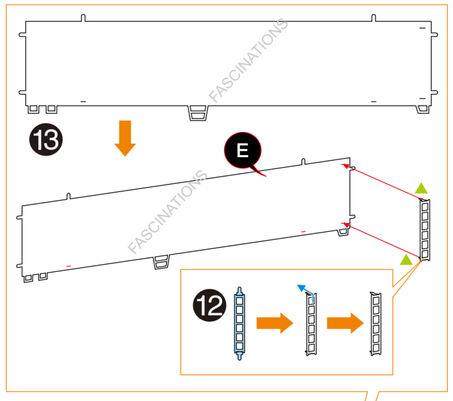

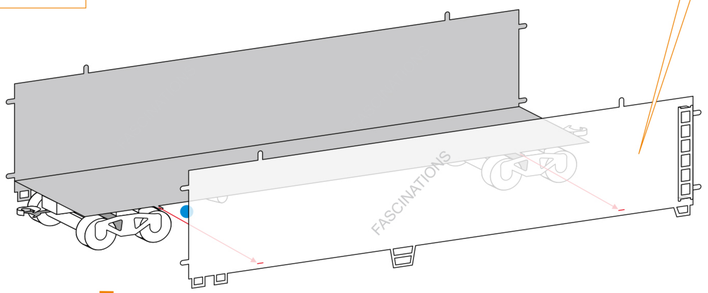

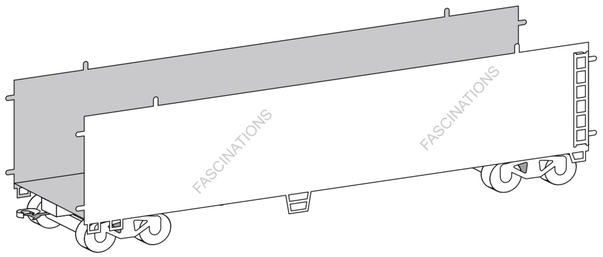

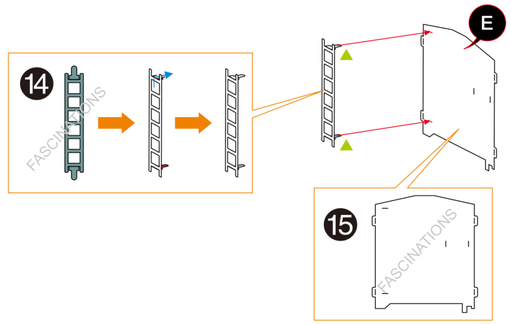

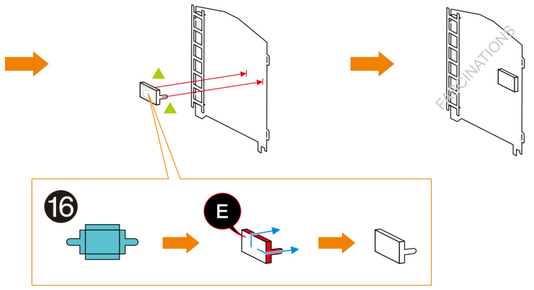

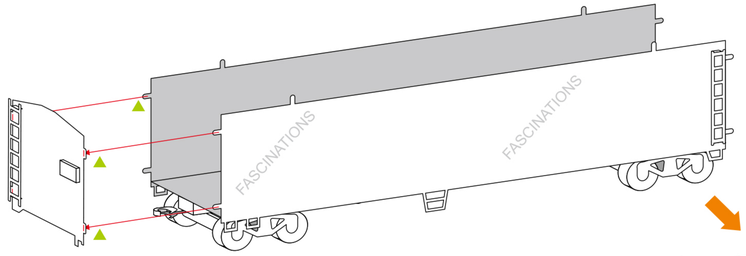

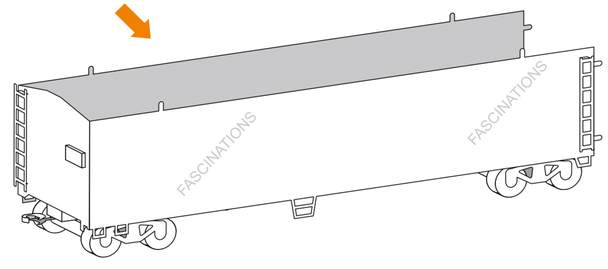

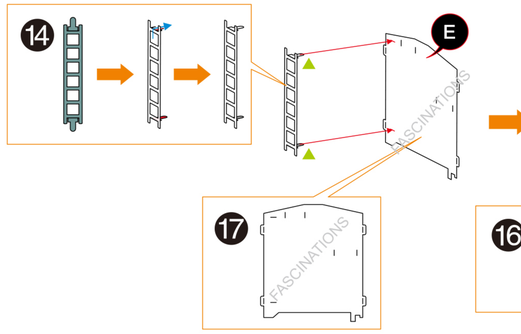

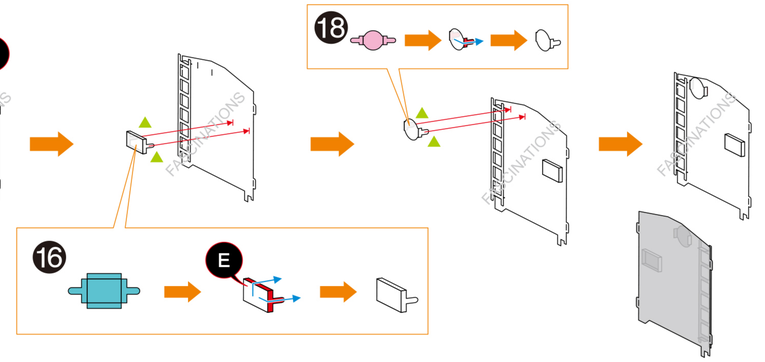

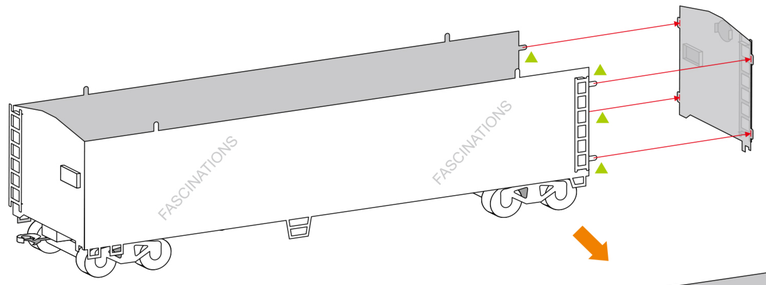

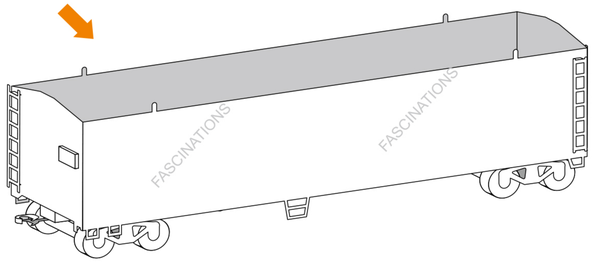

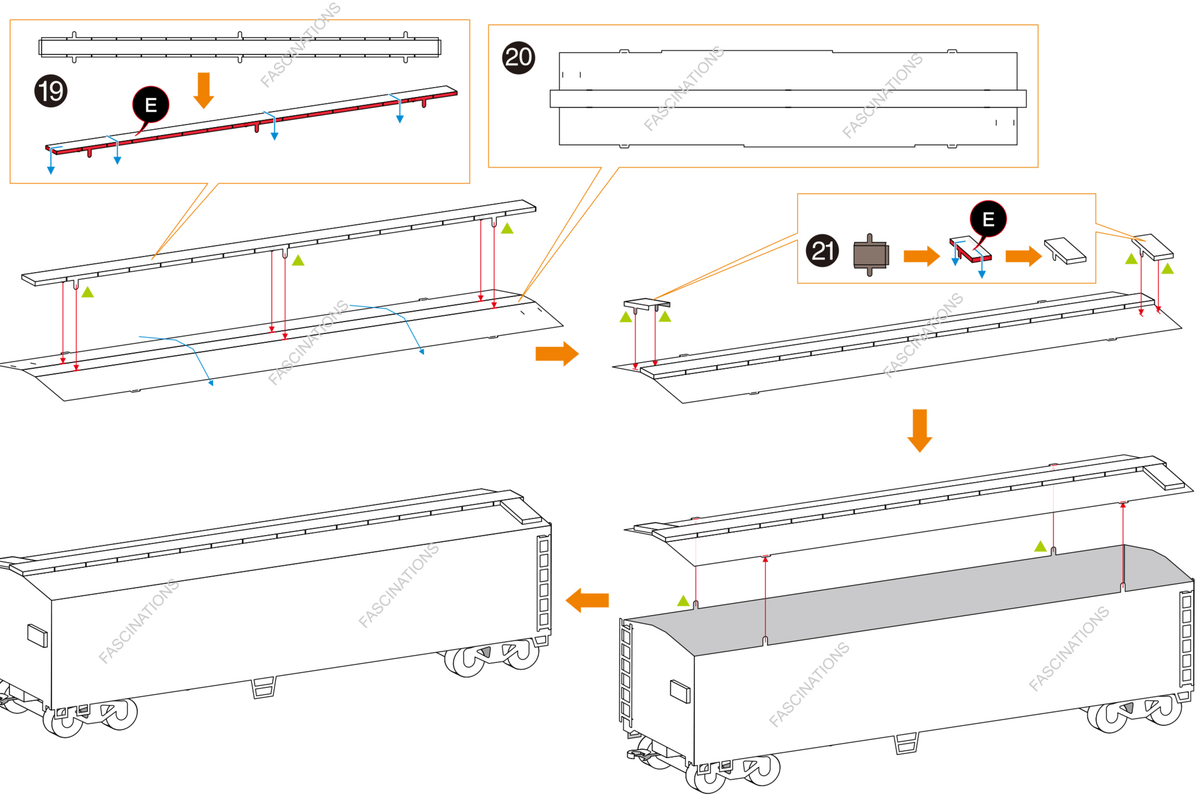
19
E
20
21
E
FASCINATIONS

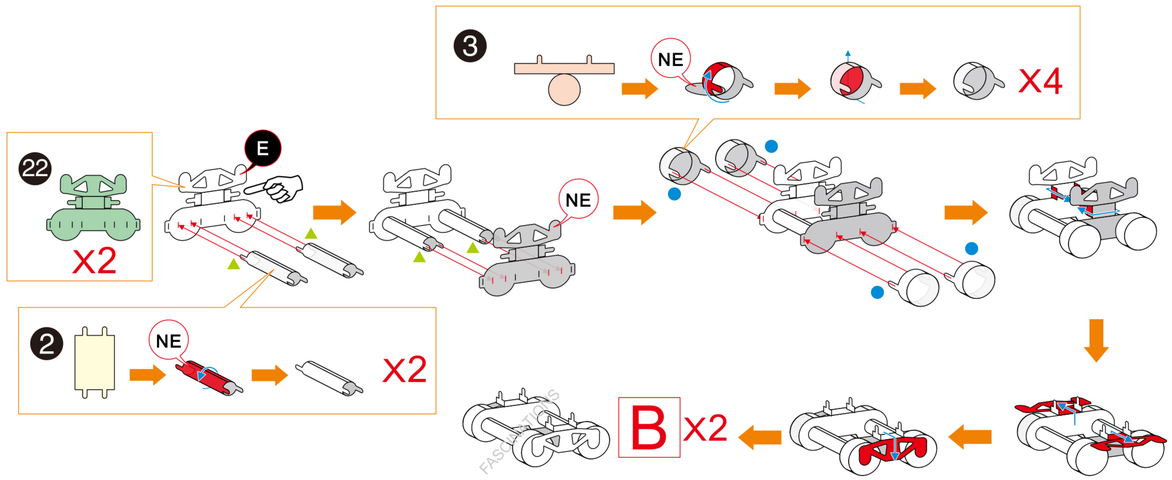
3
NE
X4
22
E
X2
NE
2
NE
X2
B
X2

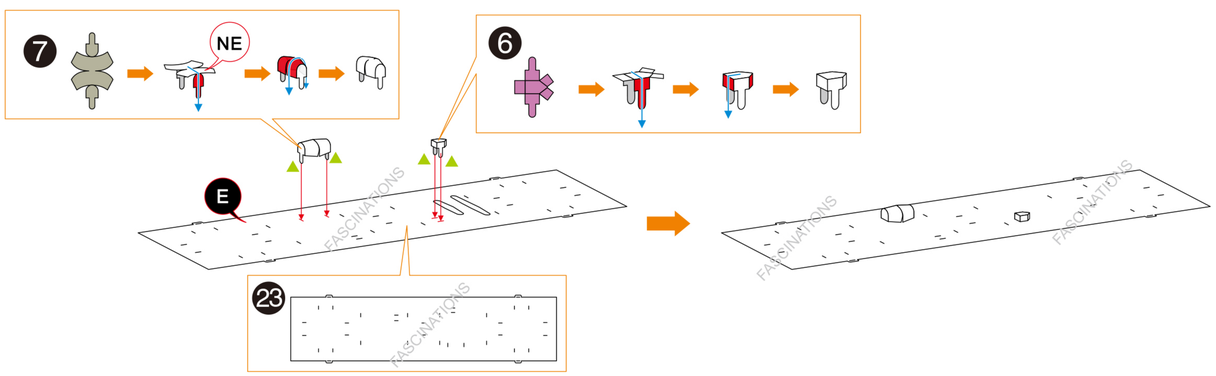
7
NE
E
6
23
FASCINATIONS

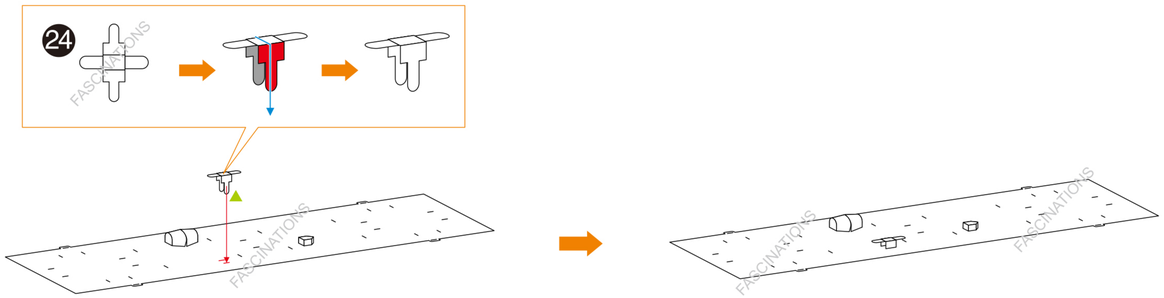
24
FASCINATIONS

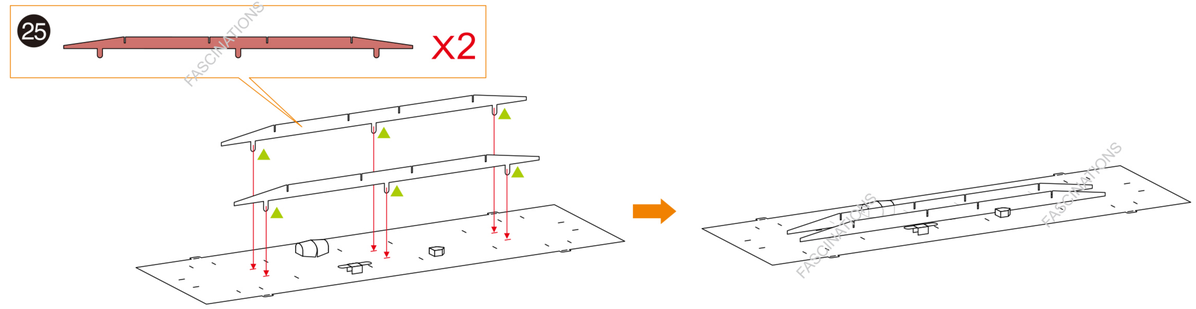
25
X2
FASCINATIONS

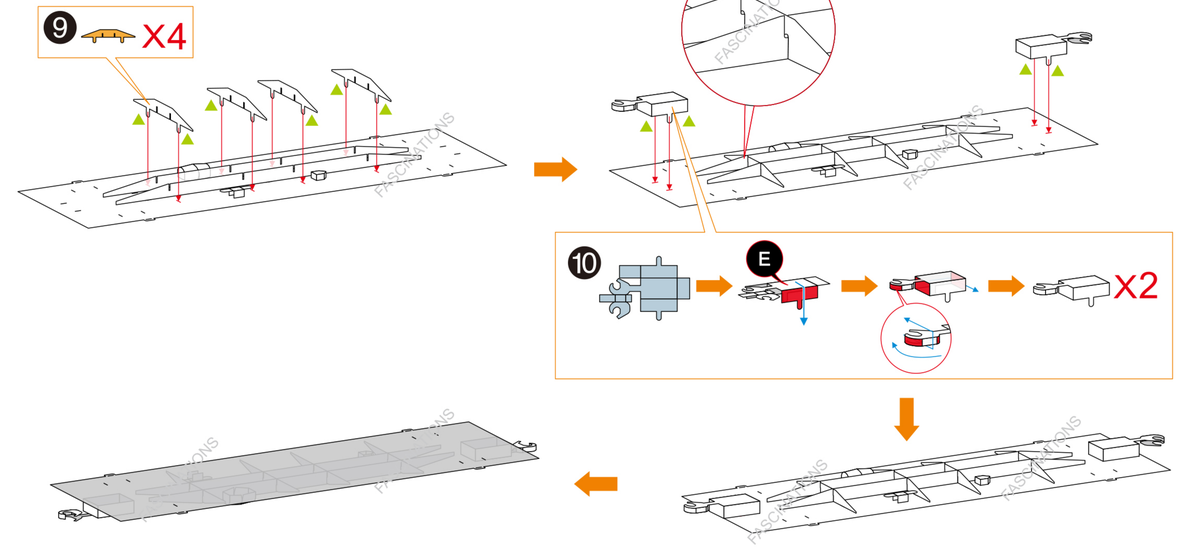
9
X4
10
E
X2
FASCINATIONS

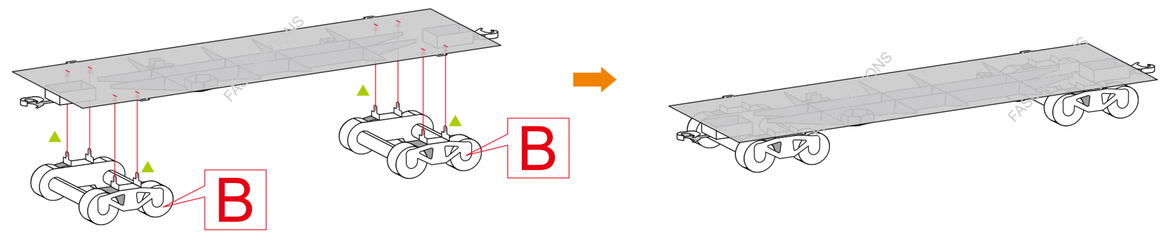
B
B
FASCINATIONS

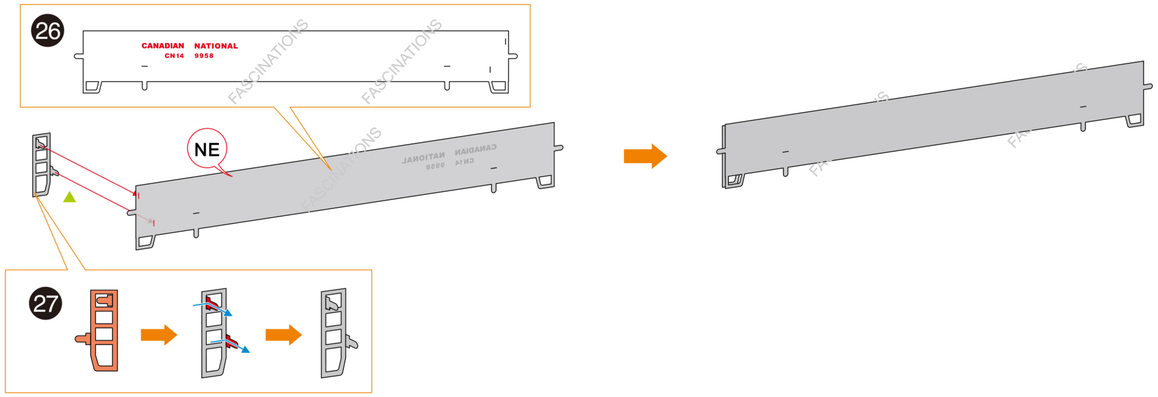

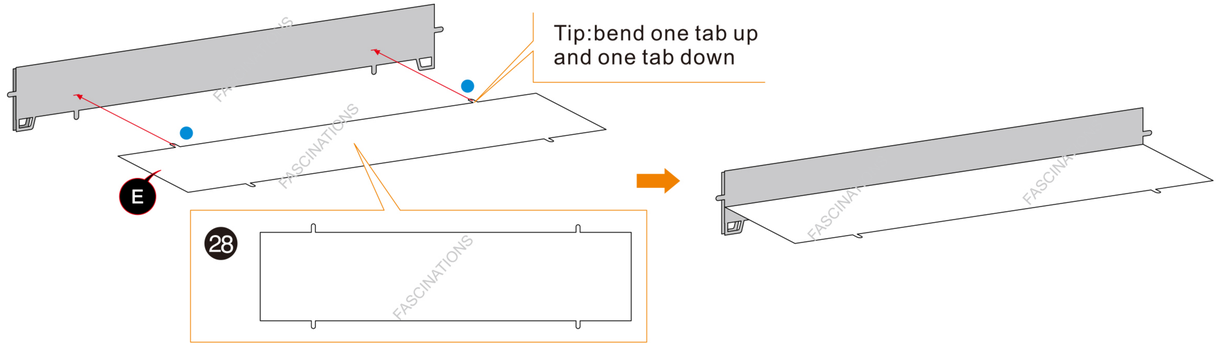

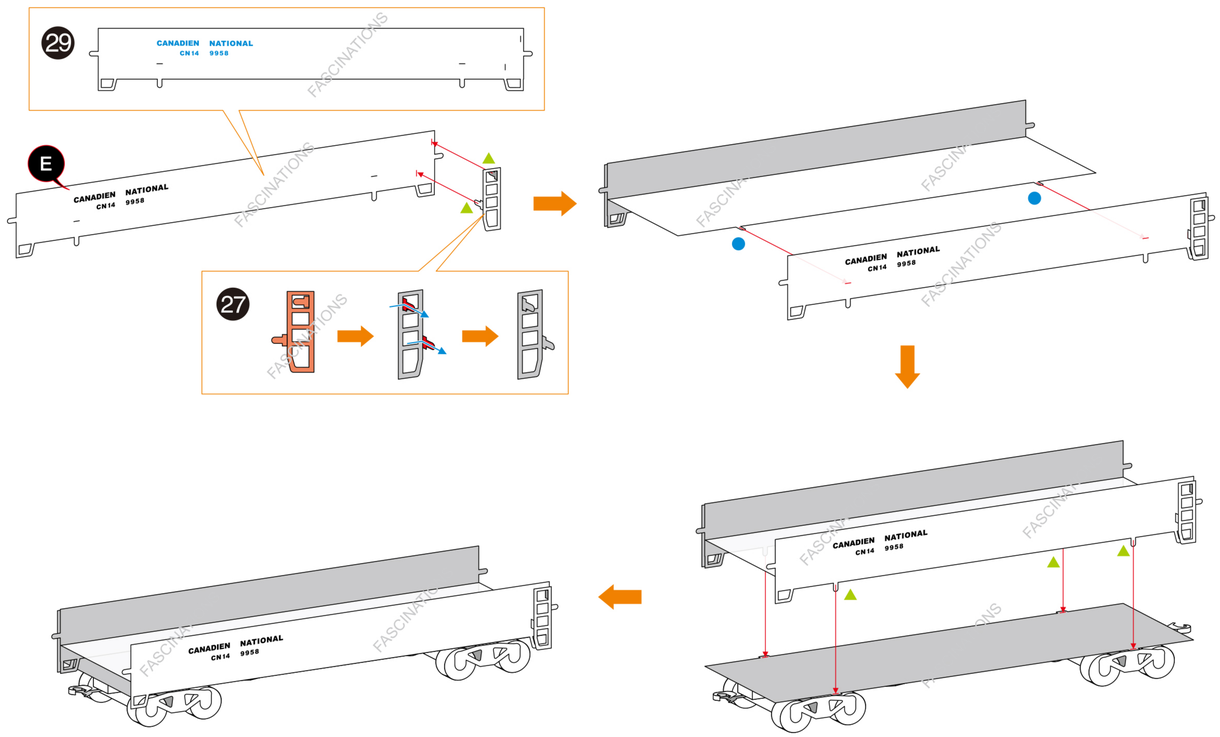

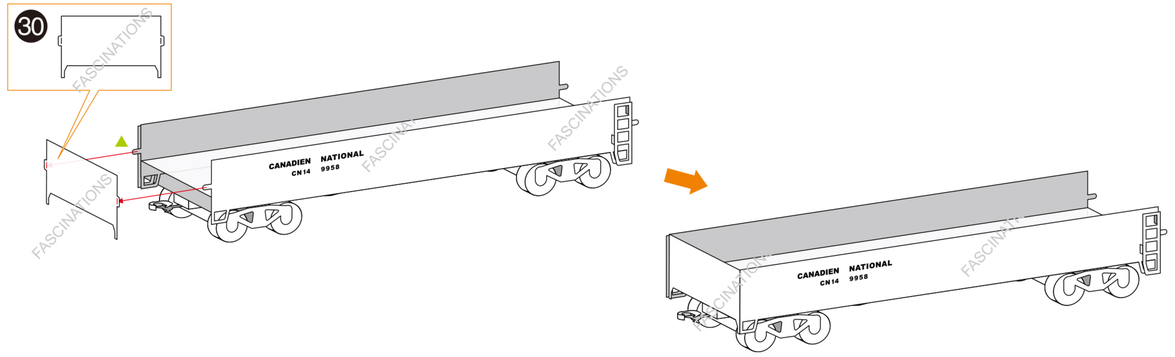

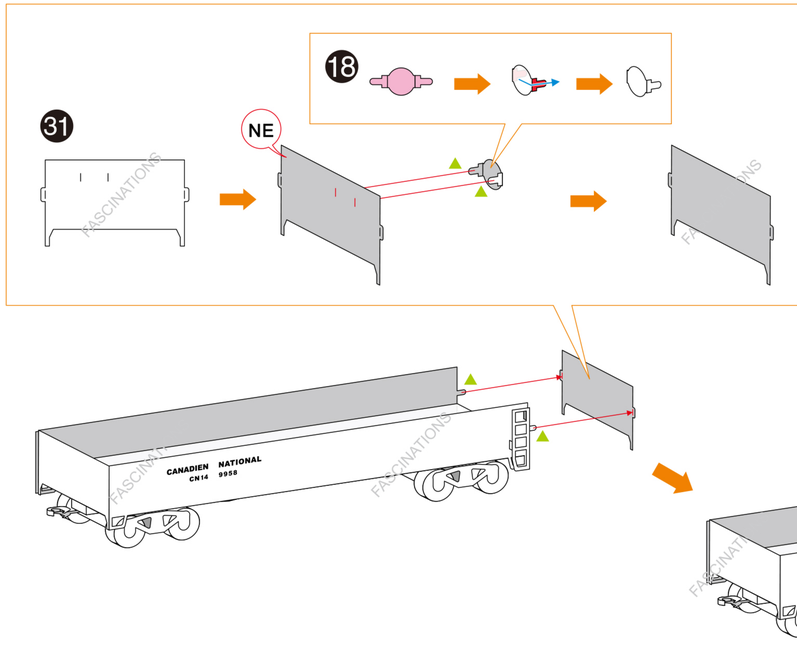

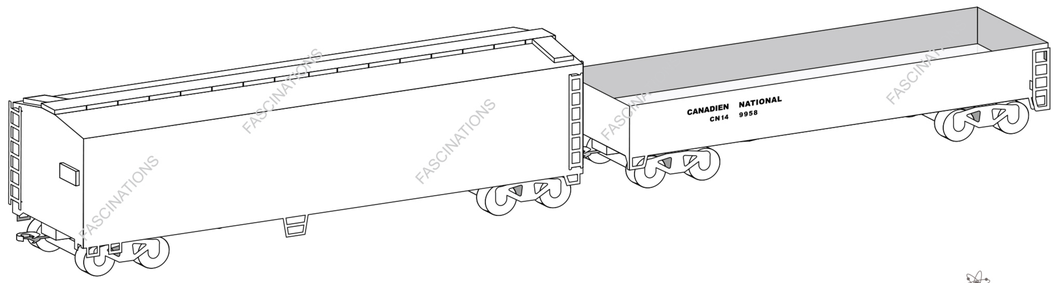

Fascinations®
©2016 Fascinations Seattle, WA
www.metalearth.com

Metal Earth®

3D METAL MODEL KITS

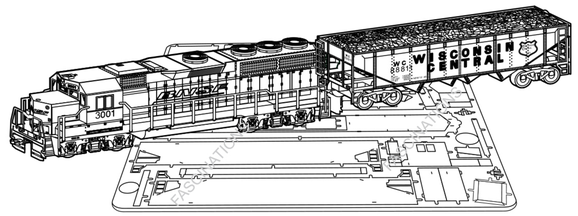

Diesel Locomotive And Gondola Car

Item No. MMG104

360° view

It is highly recommended that you visit
www.metalearth.com/360/mmg104
to see the completed model before assembling your own

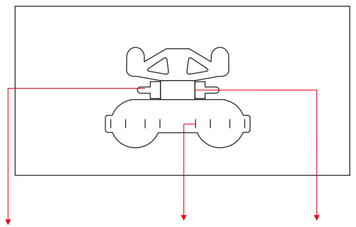

Insertion tabs are inserted and then folded

Insertion holes

Fold lines can be seen as shown here

Legends:

- E — Engraved side
- NE — Non-engraved side
- Attention point
- Insert tab and bend 90 degrees
- Insert tab and twist 90 degrees

Assembly tip:

If needed, slightly twist tabs to hold parts together then untwist and bend them down for a nice finish

Recommended tools:

-Wire cutters: helpful for taking parts from the metal sheets.

-Tweezers or needle nose pliers: helpful for folding parts, bending and twisting tabs.

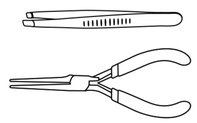

Metal sheets

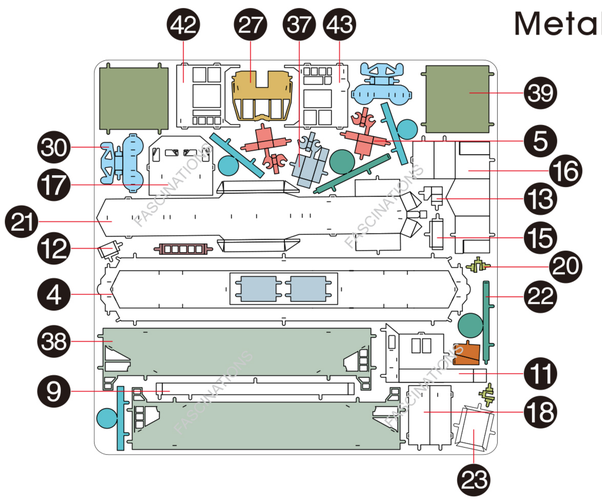

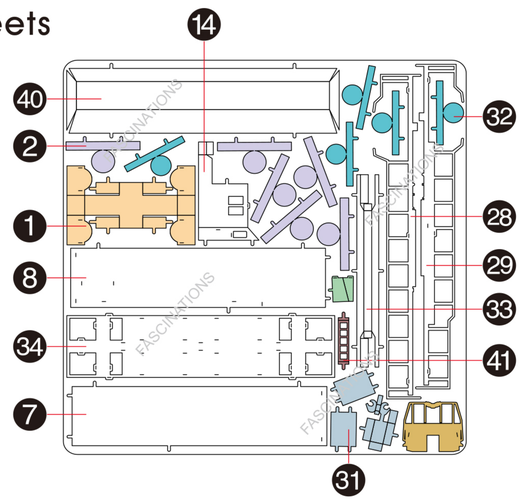

In order to avoid possible injury from sharp edges, please carefully discard the metal sheet after parts have been removed

Assembly Flow Chart

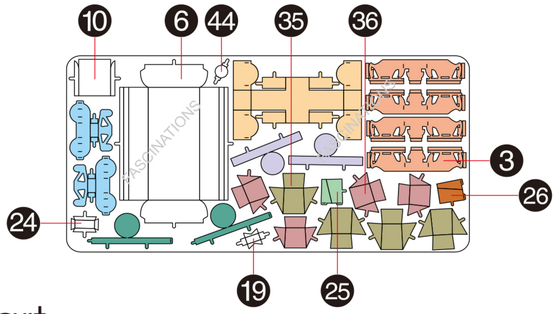

Assembly Flow Chart

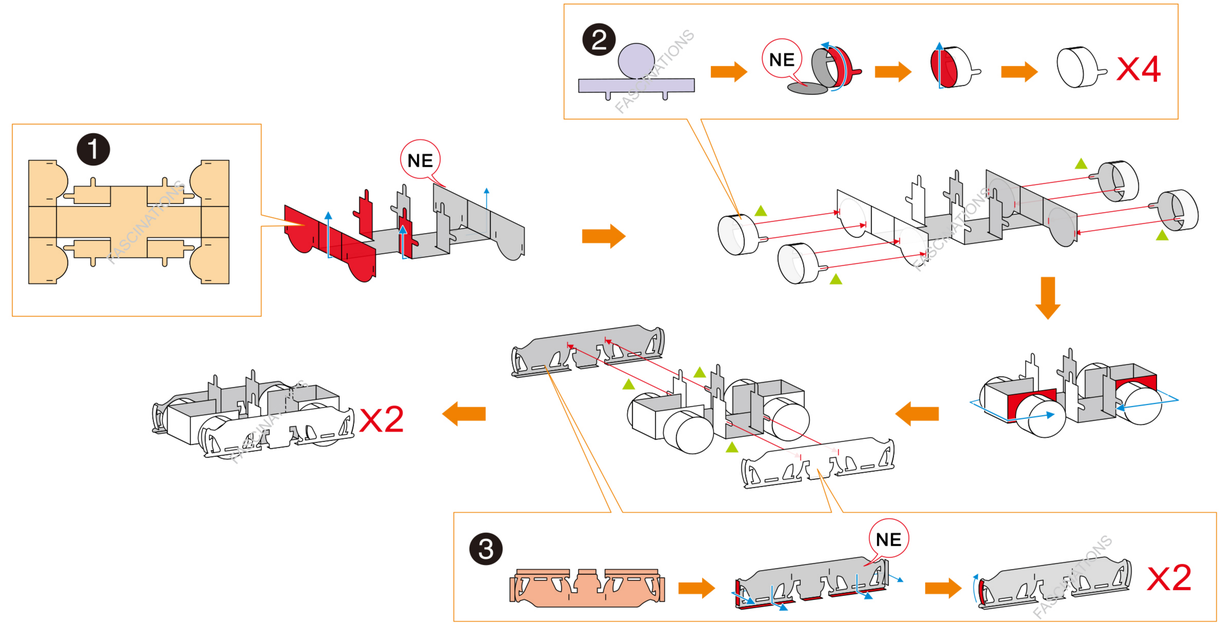

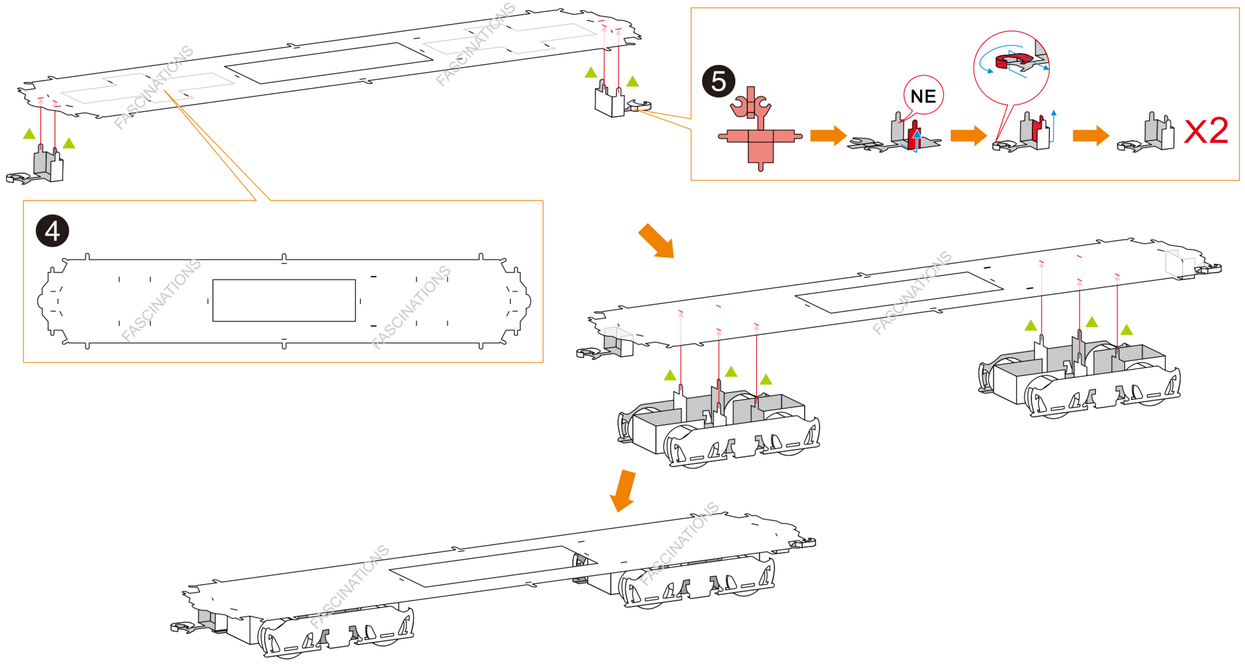

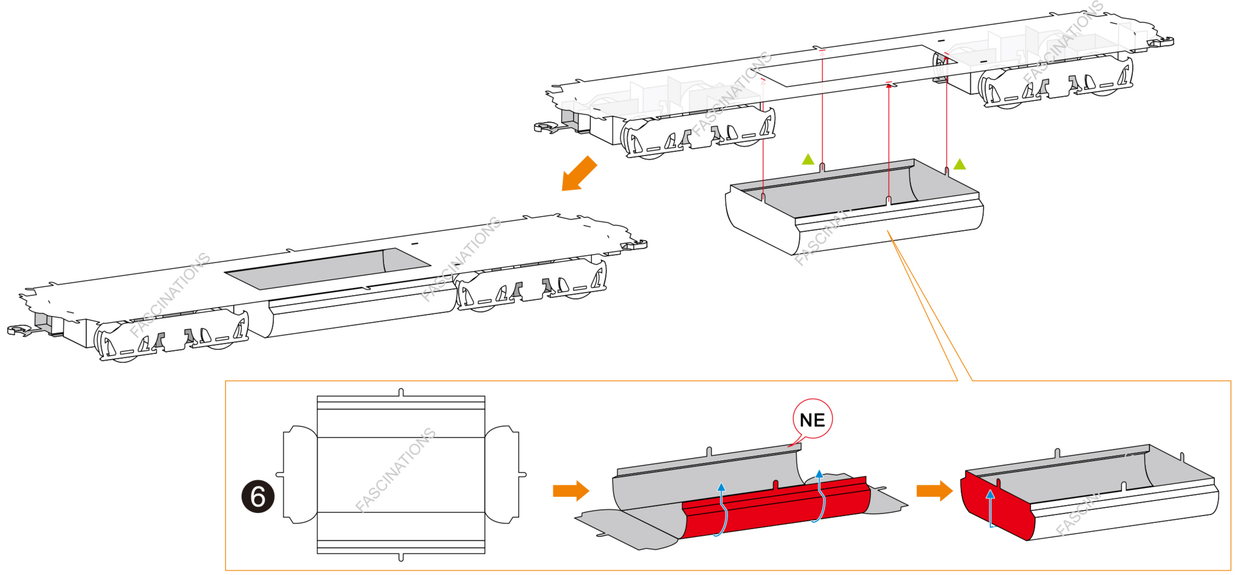
6
NE

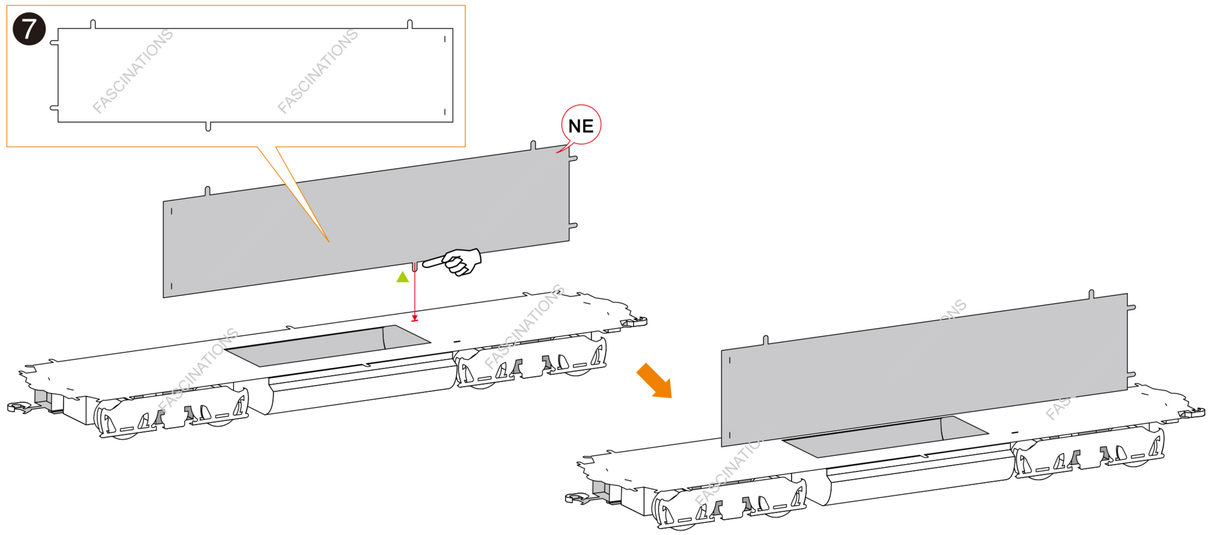
7
NE

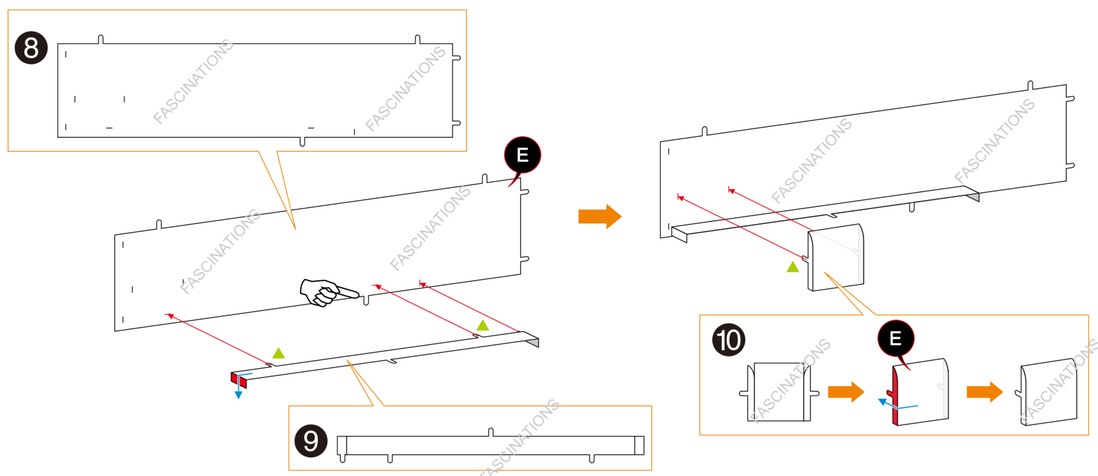
8
E
9
10
E

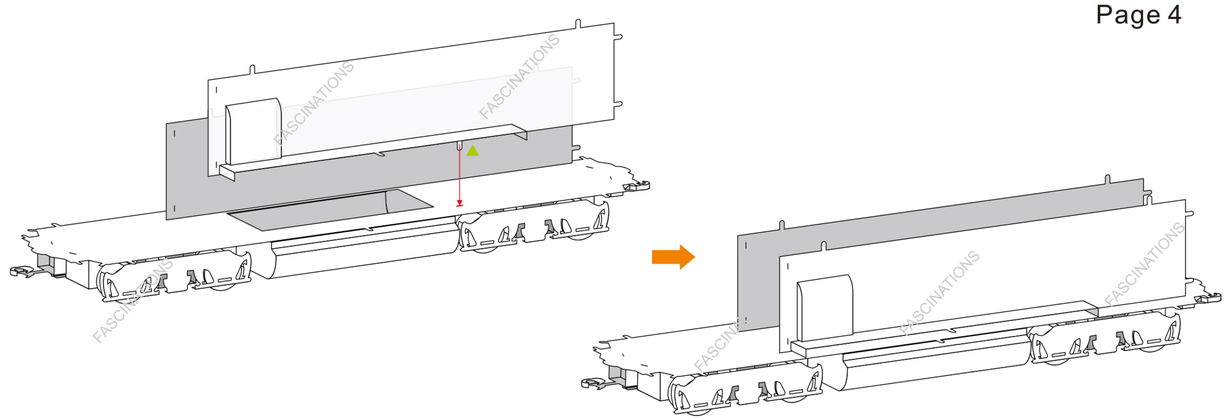

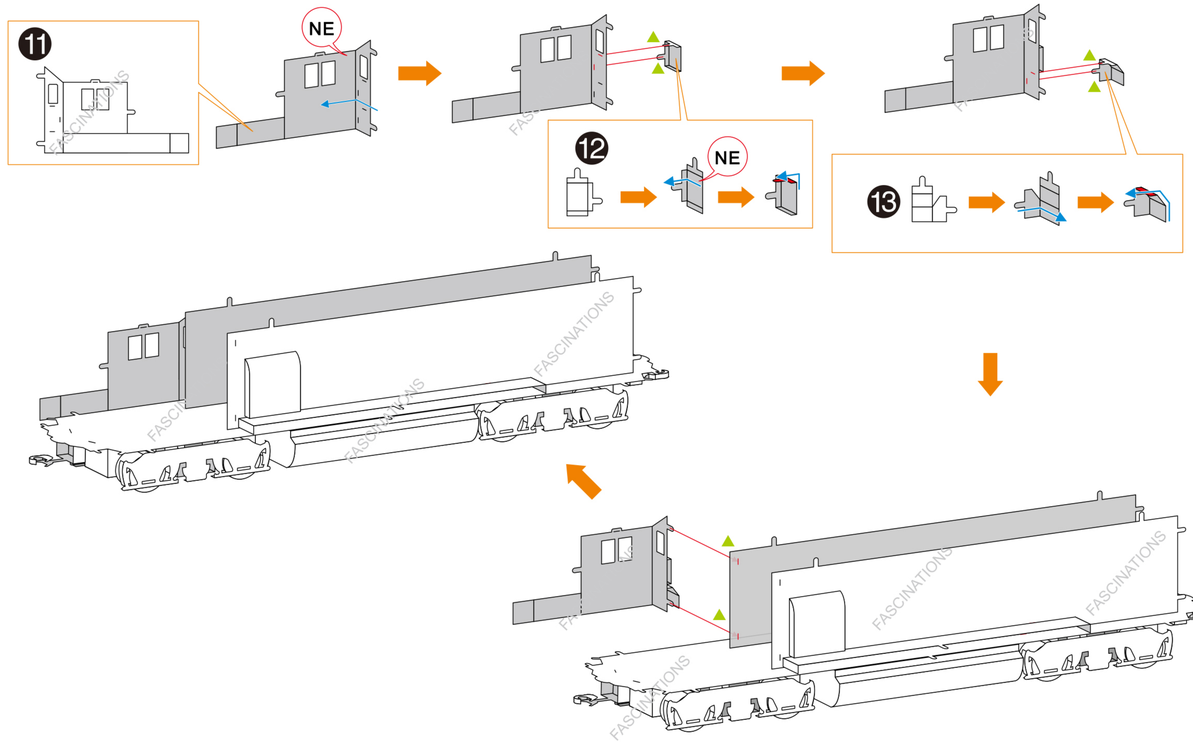
11
NE
12
NE
13

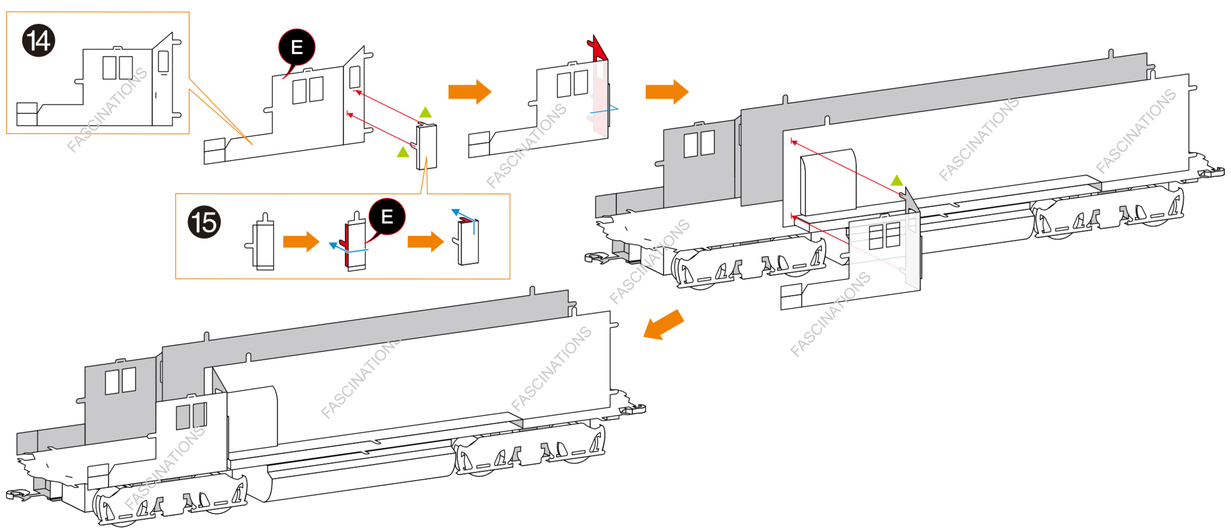
14
E
15
E

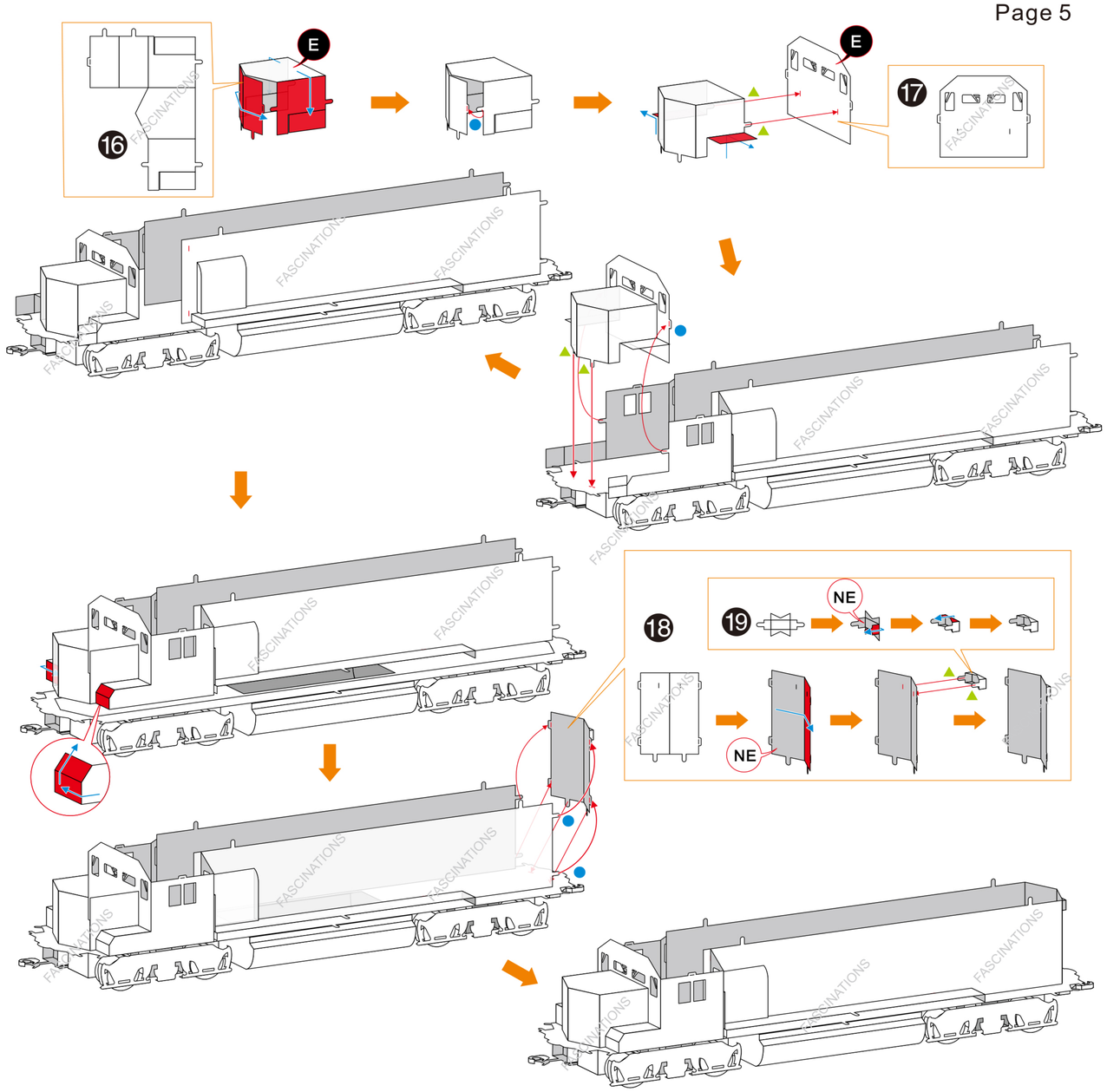
16
E
17
18
19
NE
NE

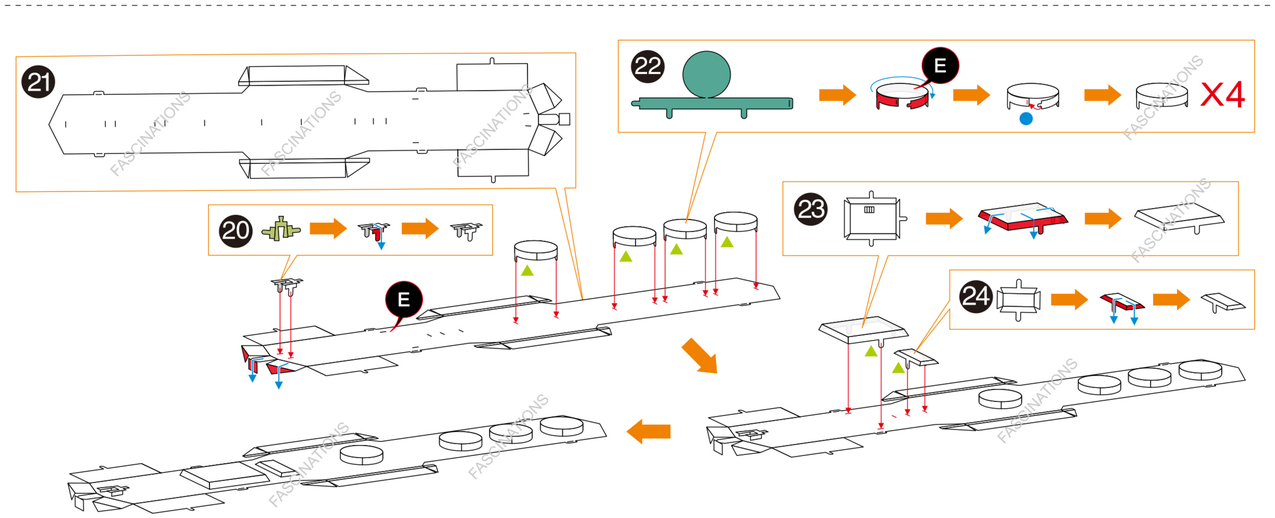
21
22
E
X4
20
E
23
24

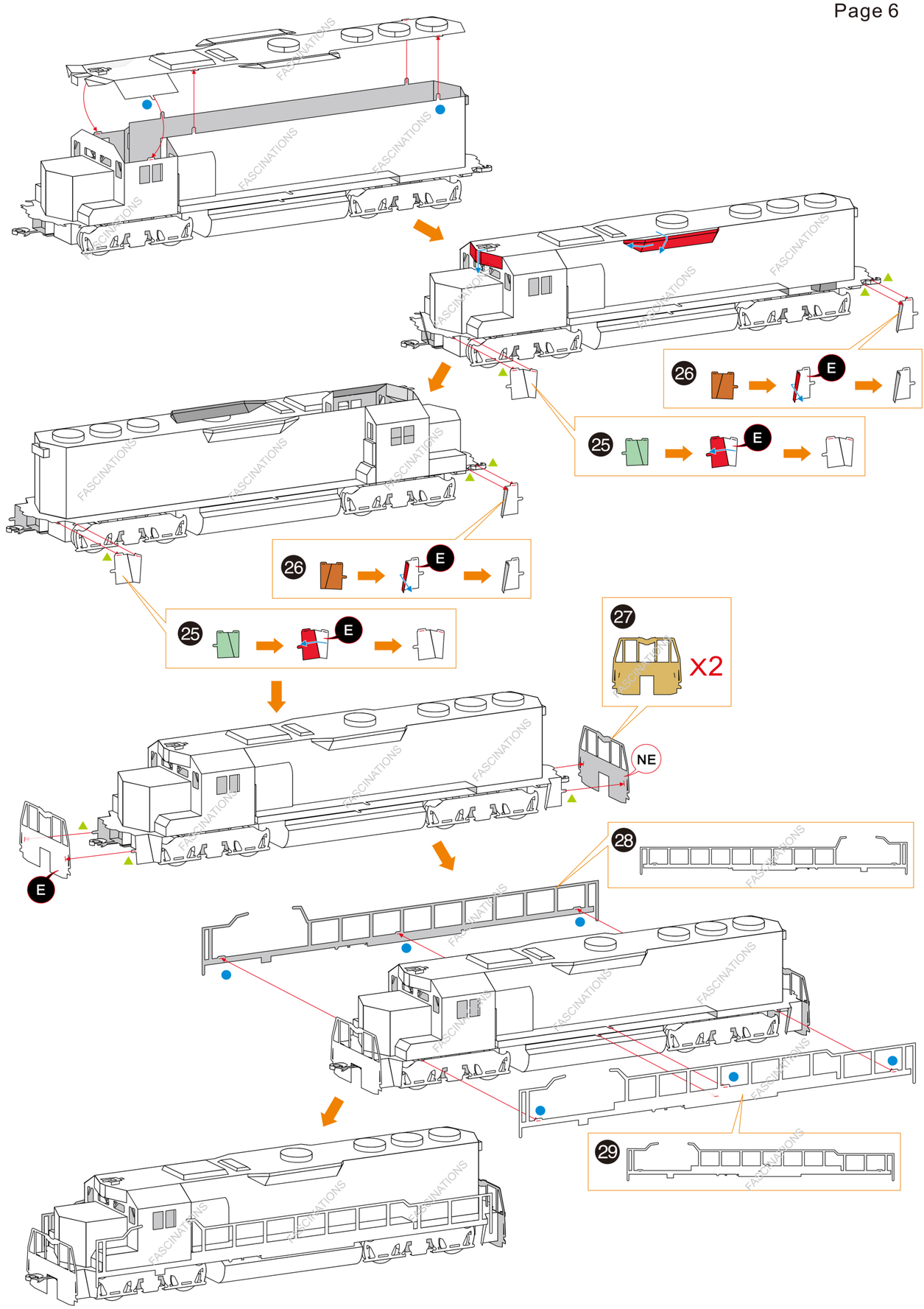
26
E
25
E
26
E
25
E
27
X2
NE
E
28
29

If preferred,do not twist these tabs too tight.After completing the gondola car,go back and change these tabs from twisted to bent for a nicer finish.

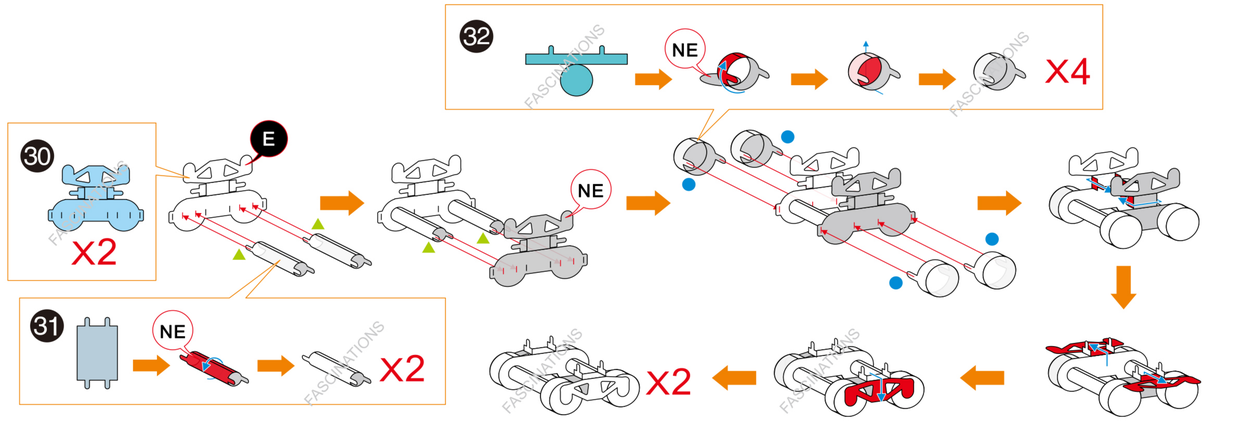

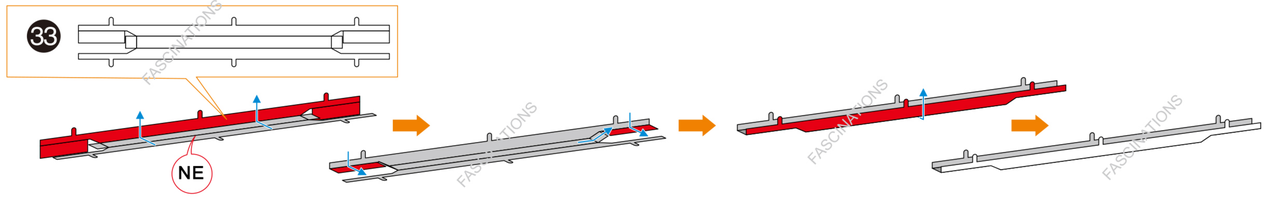

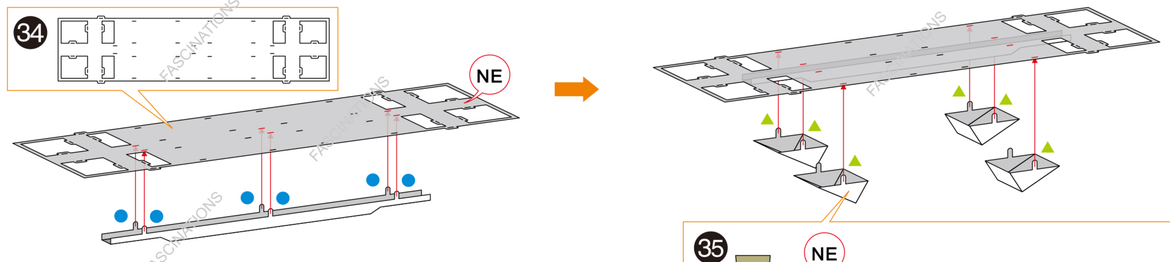

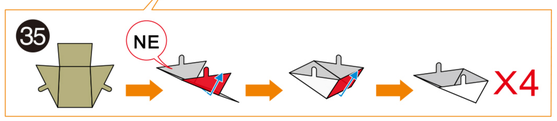

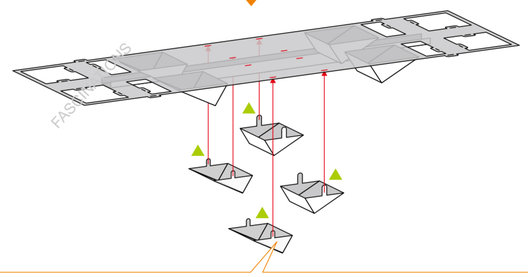

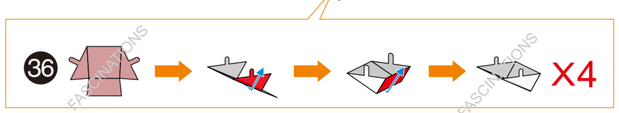

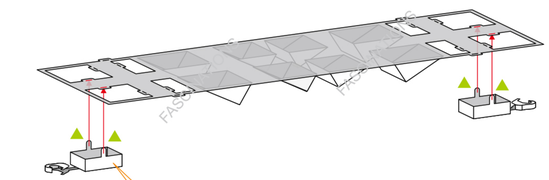

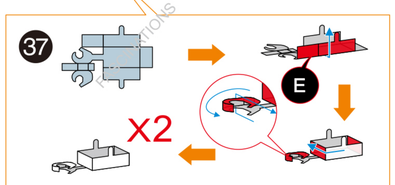

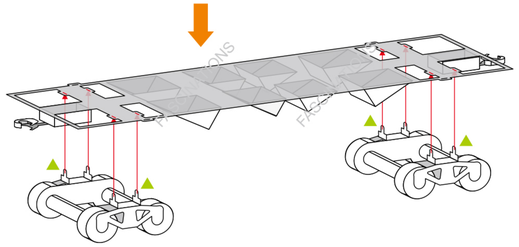

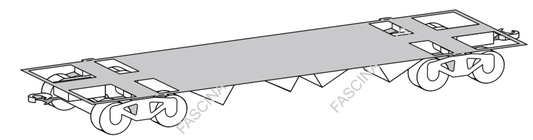

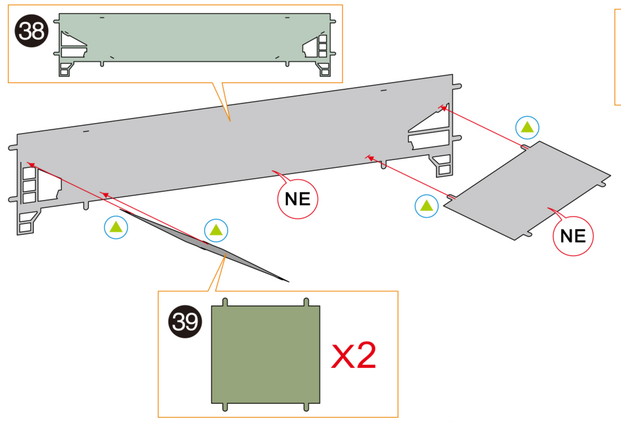

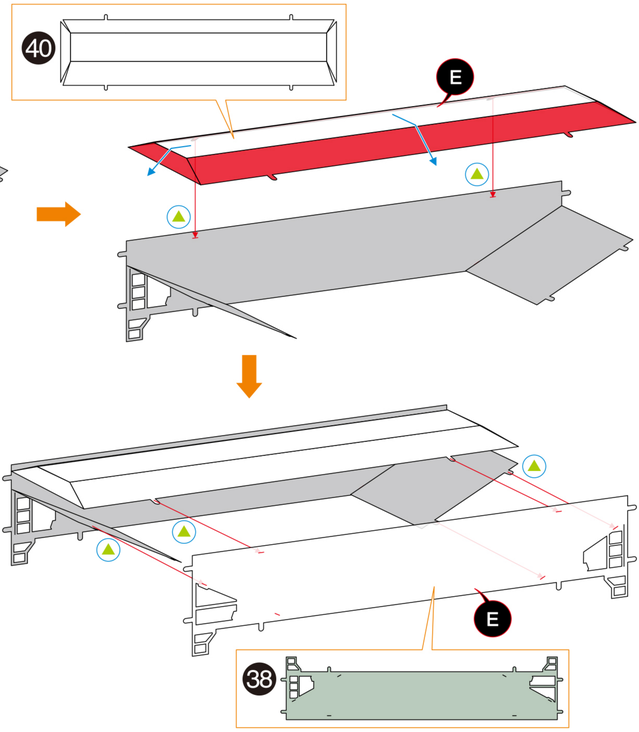

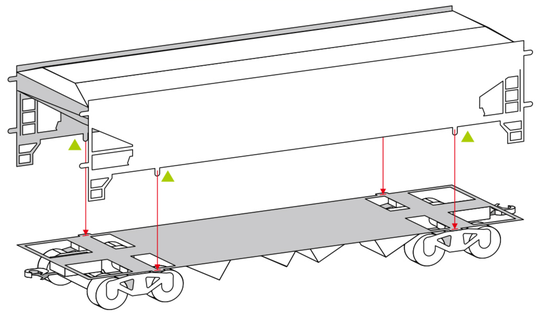

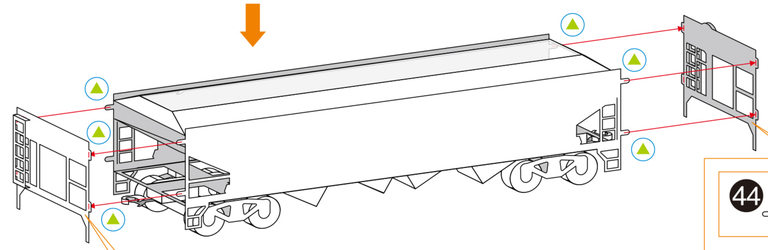

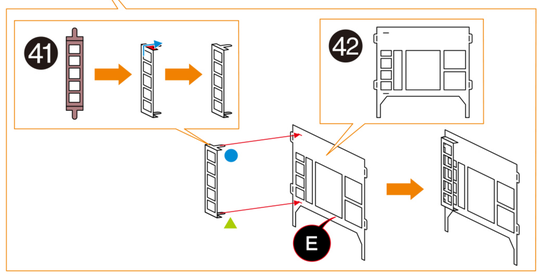

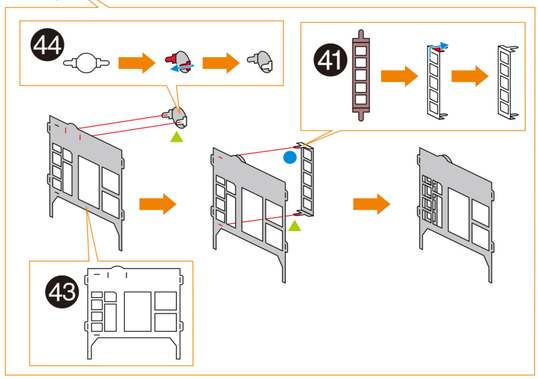

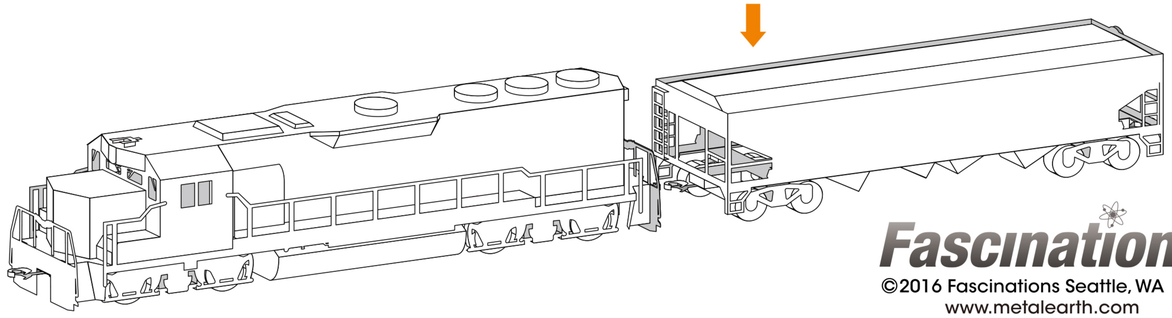

Fascinations®
©2016 Fascinations Seattle, WA
www.metalearth.com

Metal Earth®

3D METAL MODEL KITS

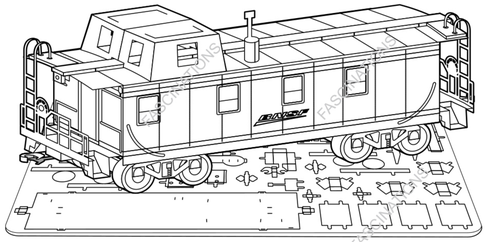

Off Center Caboose

Item No. MMG104

360° view

It is highly recommended that you visit
www.metalearth.com/360/mmg104
to see the completed model before assembling your own

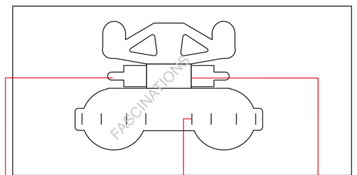

Insertion tabs are inserted and then folded

Insertion holes

Fold lines can be seen as shown here

Legends:

- E — Engraved side
- NE — Non-engraved side
- Attention point
- Insert tab and bend 90 degrees
- Insert tab and twist 90 degrees

Assembly tip:

If needed, slightly twist tabs to hold parts together then untwist and bend them down for a nice finish

Recommended tools:

-Wire cutters: helpful for taking parts from the metal sheets.

-Tweezers or needle nose pliers: helpful for folding parts, bending and twisting tabs.

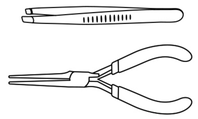

Metal sheet

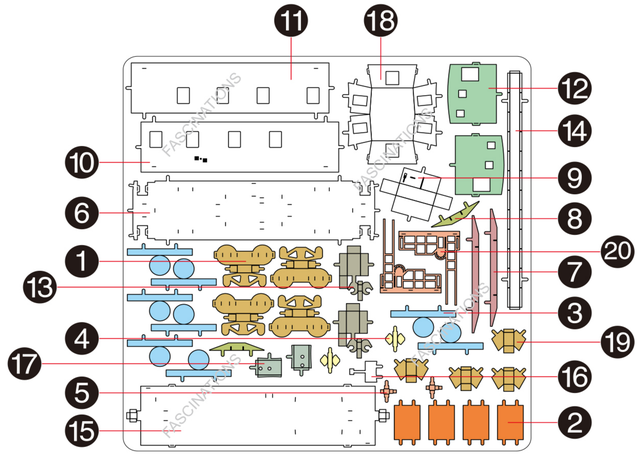

In order to avoid possible injury from sharp edges, please carefully discard the metal sheet after parts have been removed

Assembly Flow Chart

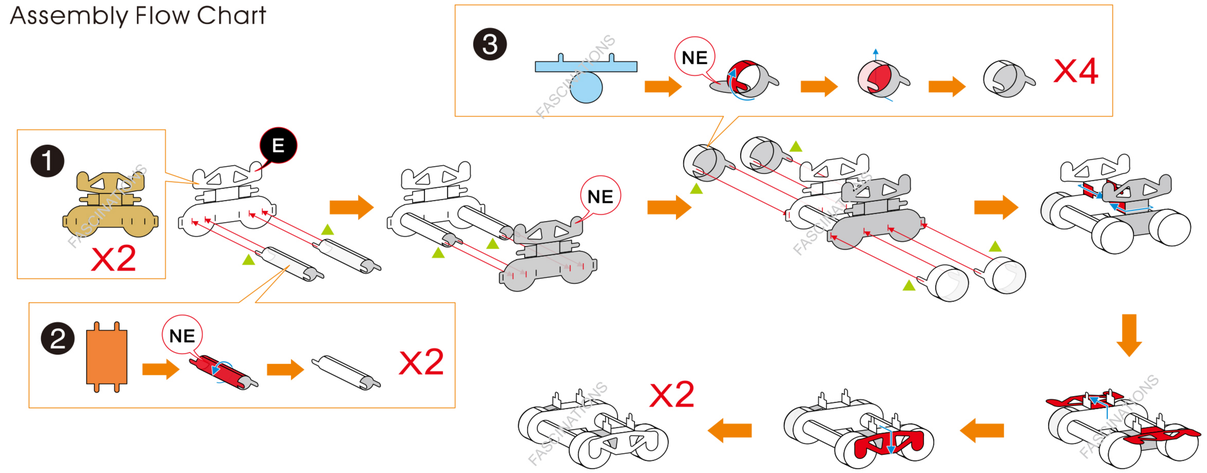

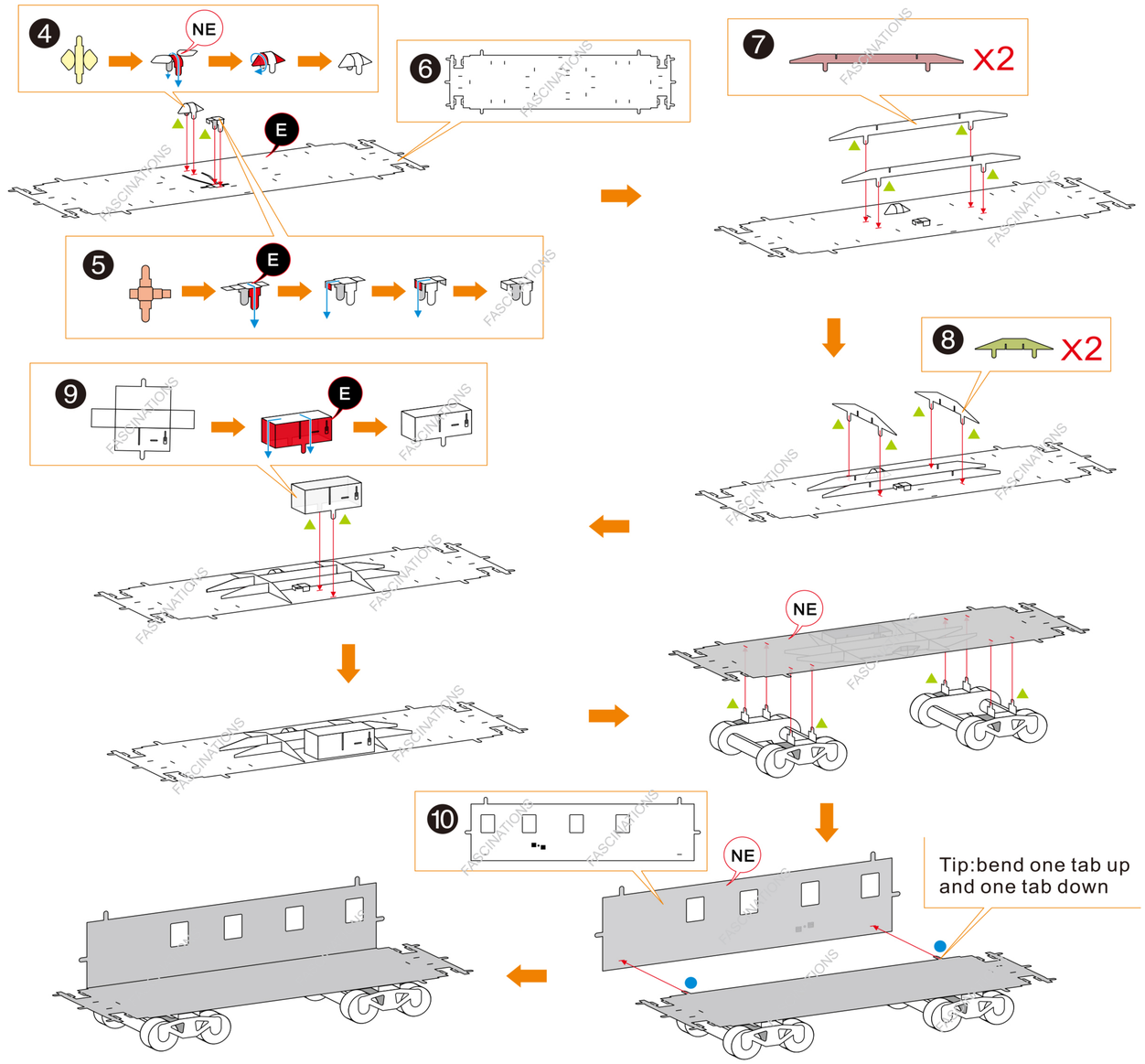

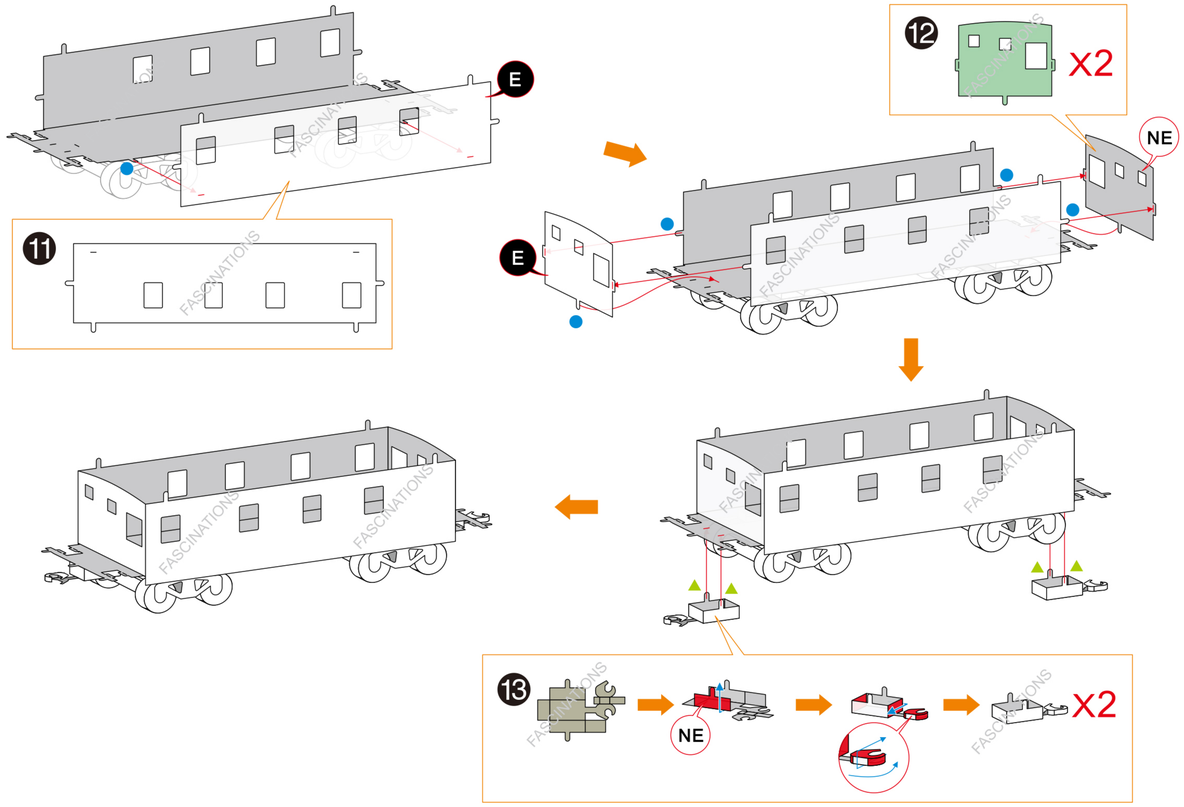

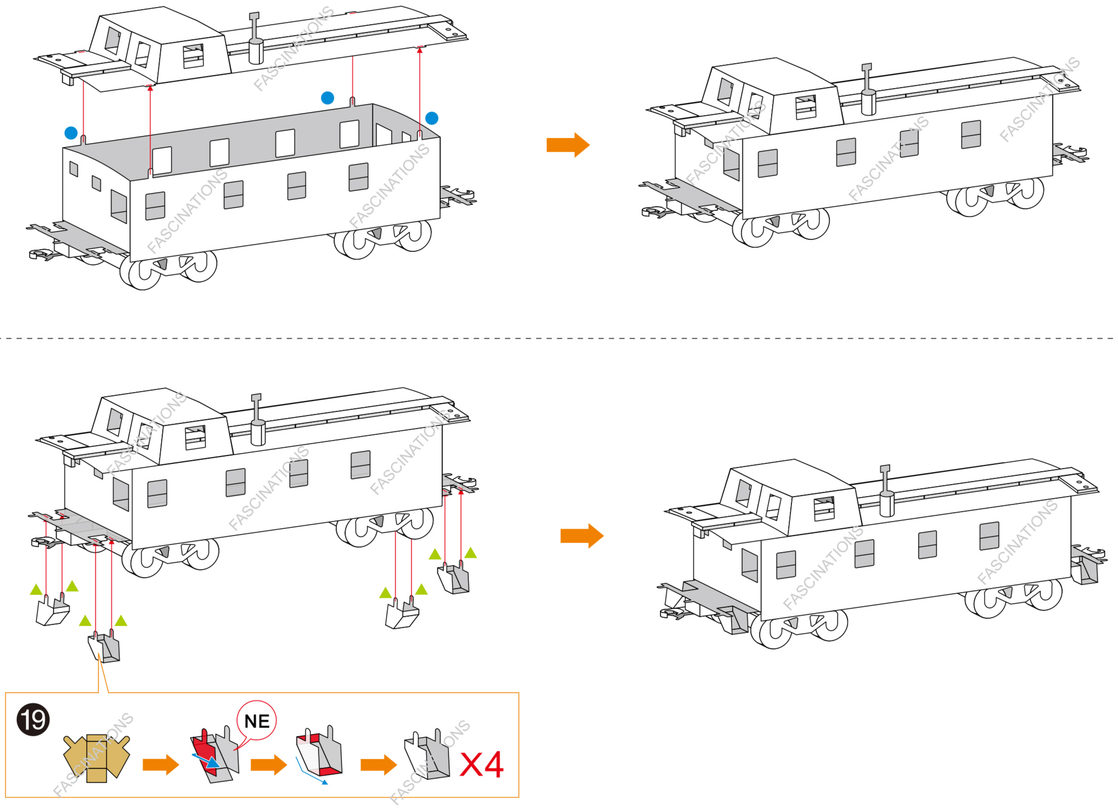

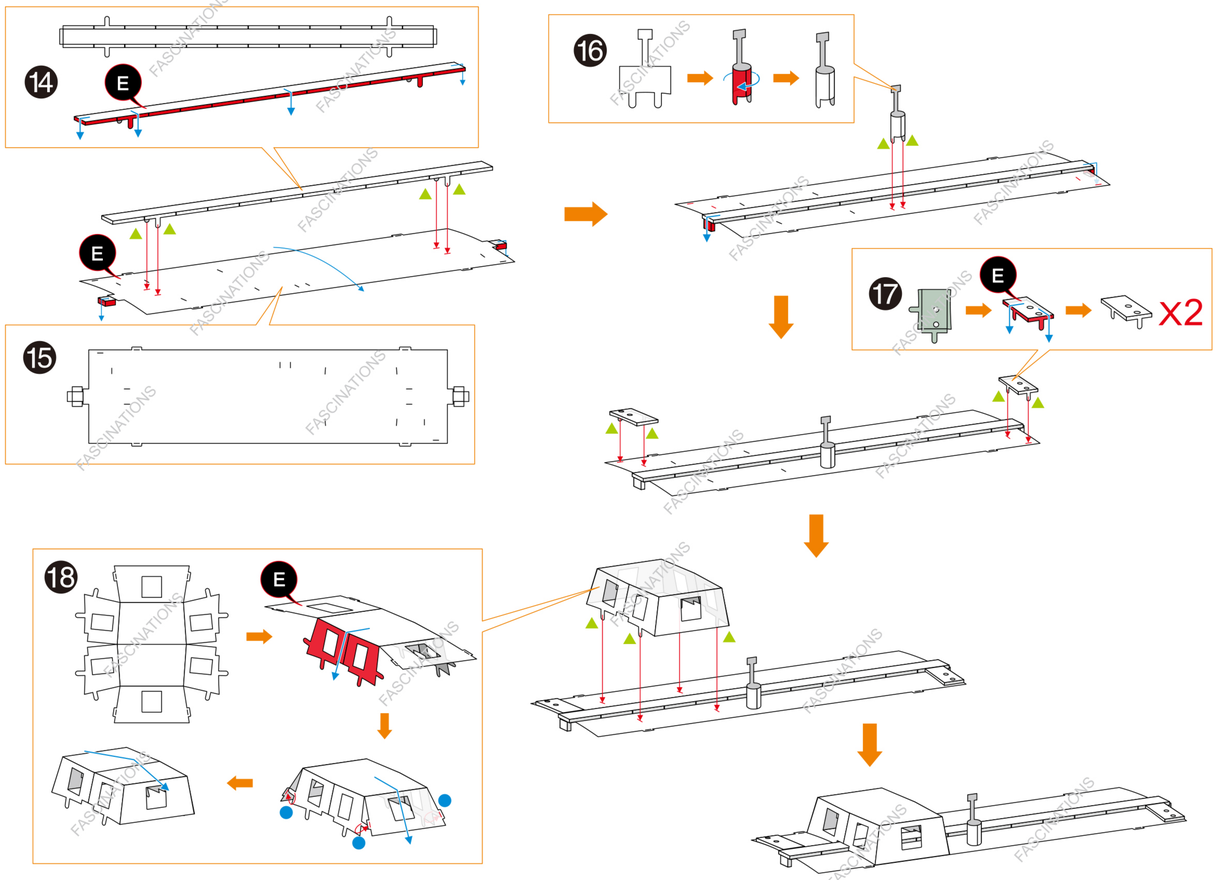

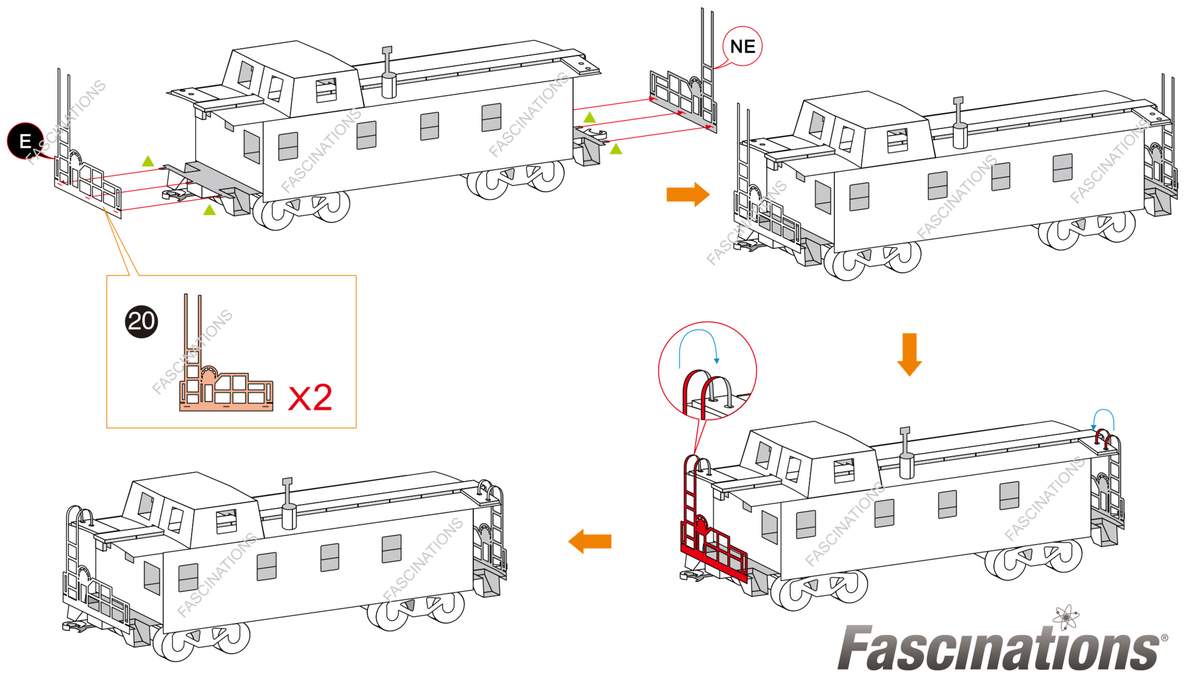

Fascinations®
©2016 Fascinations Seattle, WA
www.metalearth.com